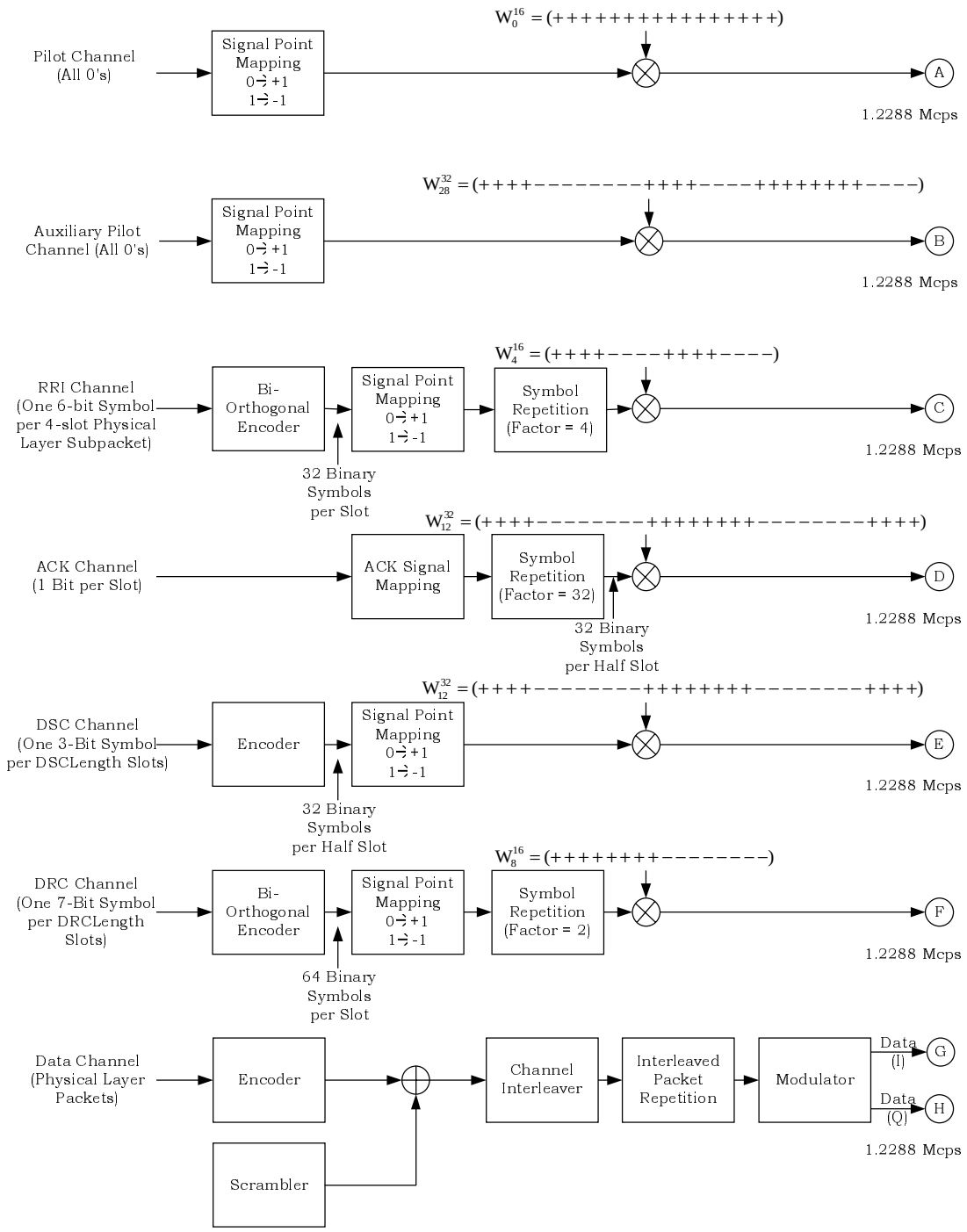

Figure 14.2.1.3.1-2. Reverse Channel Structure for the Reverse Traffic Channel (Part 1 of 5)

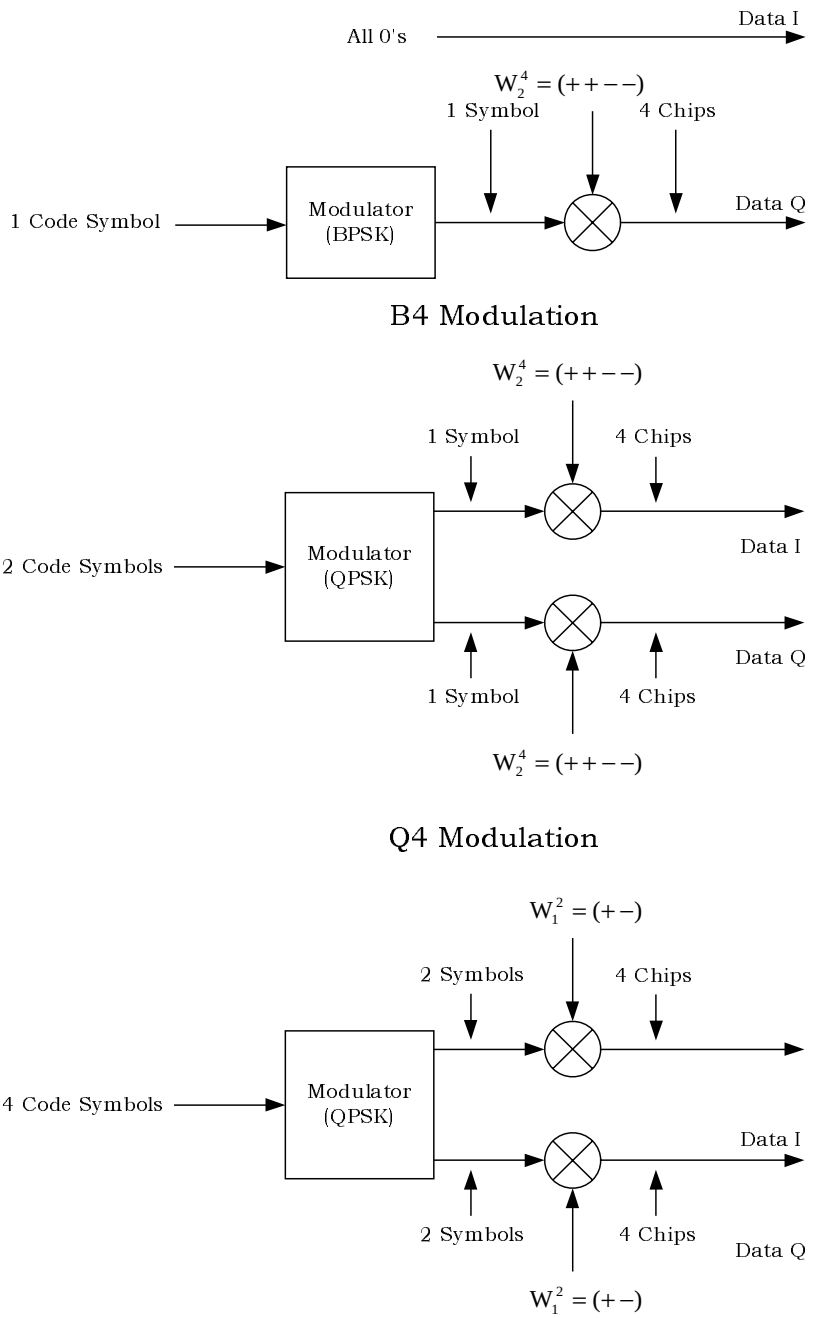

Figure 14.2.1.3.1-3. Reverse Channel Structure for the Reverse Traffic Channel (Part 2 of 5)

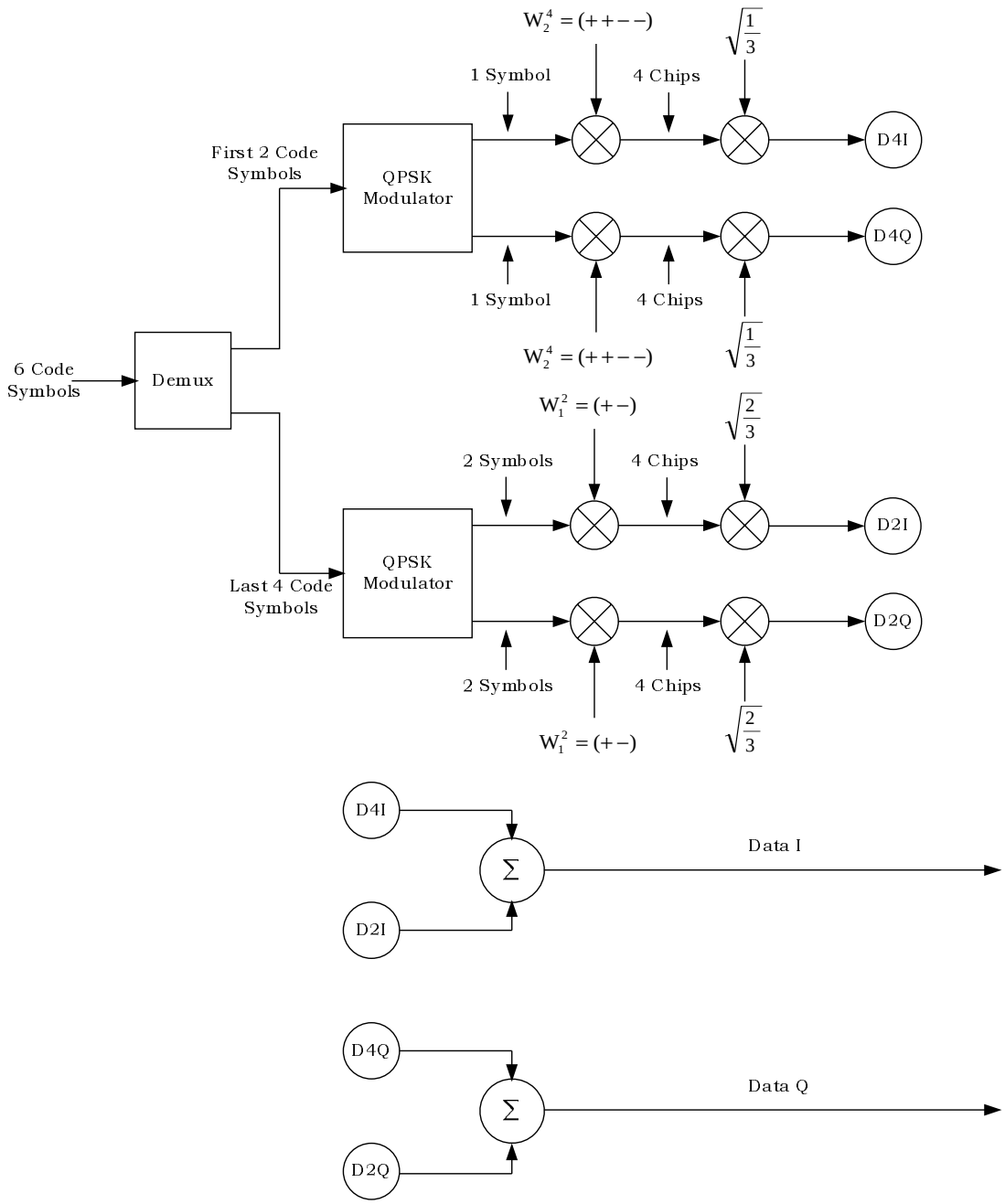

Figure 14.2.1.3.1-4. Reverse Channel Structure for the Reverse Traffic Channel (Part 3 of 5)

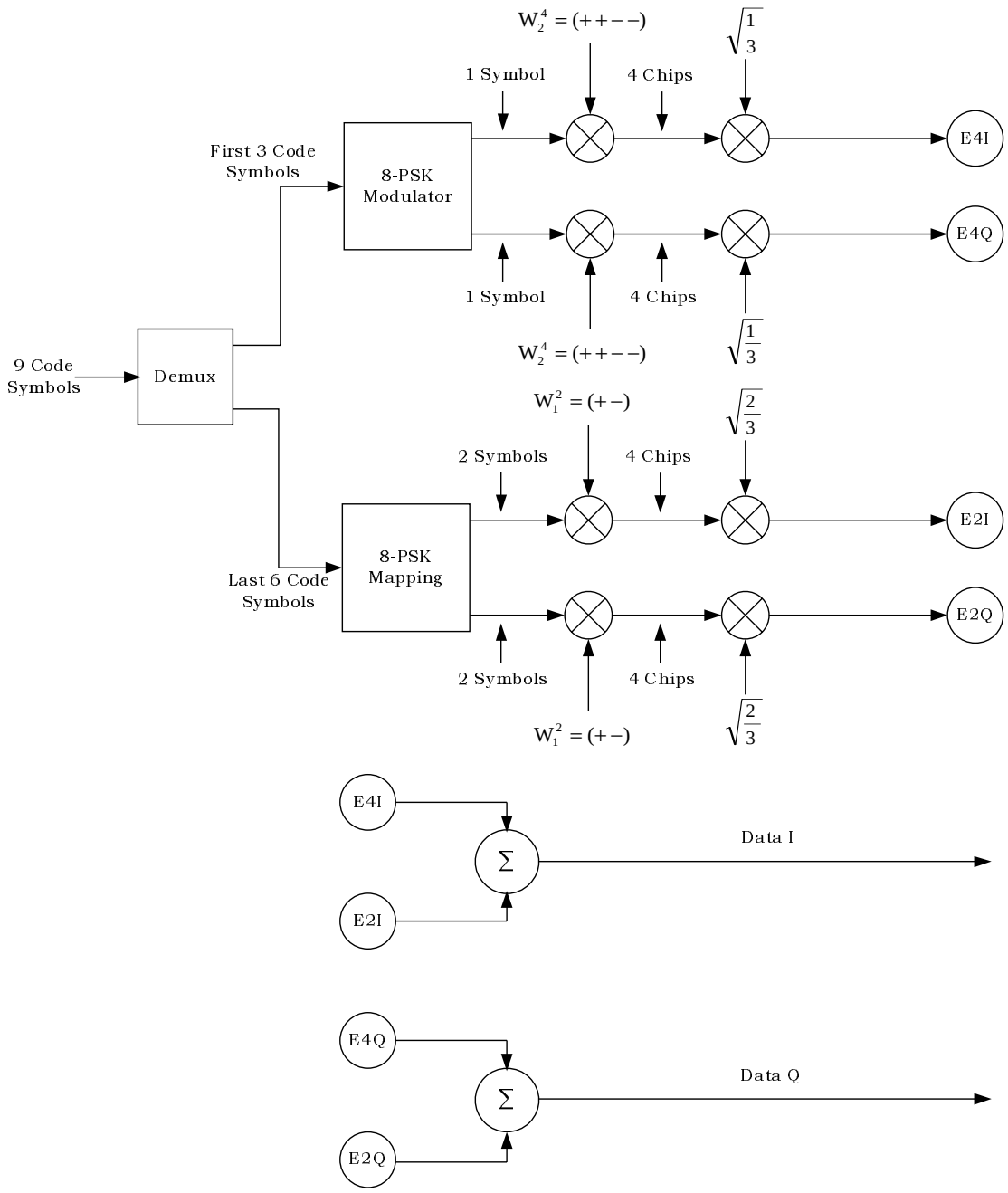

Figure 14.2.1.3.1-5. Reverse Channel Structure for the Reverse Traffic Channel (Part 4 of 5)

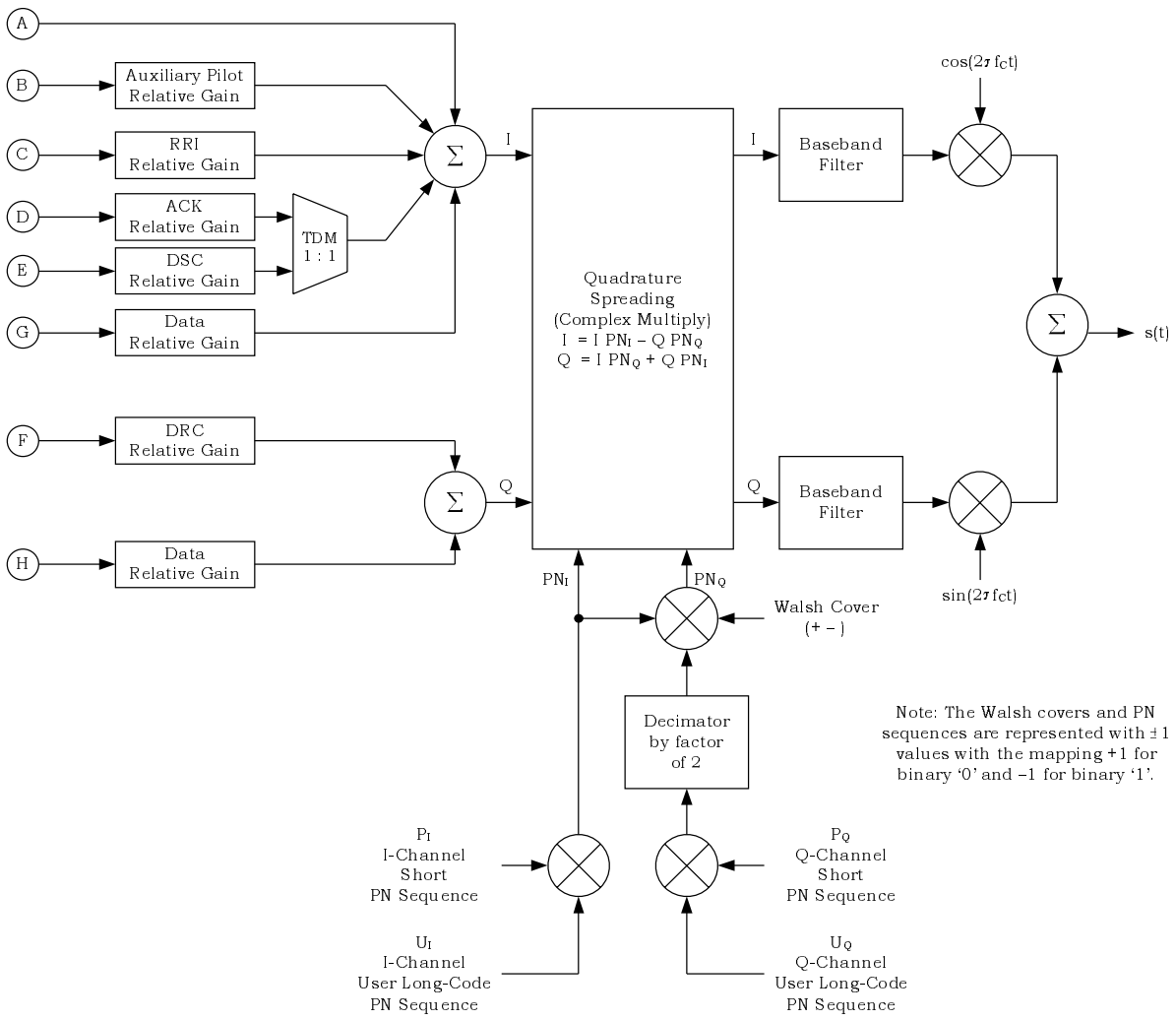

Figure 14.2.1.3.1-6. Reverse Channel Structure for the Reverse Traffic Channel (Part 5 of 5)