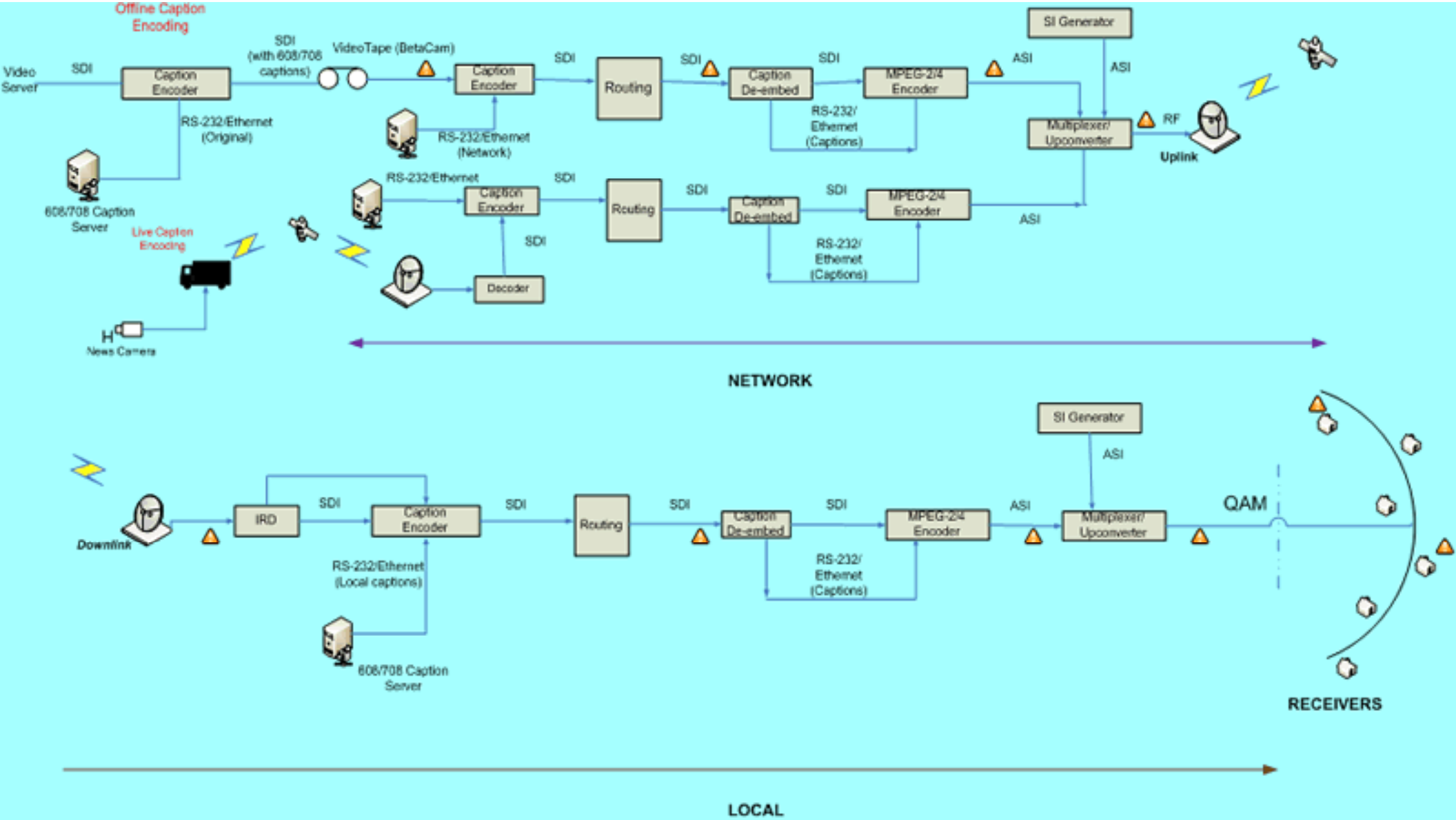

Note: The yellow caution sign in the above diagram indicates a potential location where the signal could be monitored for captions.