Technical Advisory Council
Federal Communications Commission
Summary of Meeting
June 27th, 2012

The Technical Advisory Council (TAC) for the FCC was convened for its seventh meeting at 1:00 P.M. on June 27th, 2012 in the Commission Meeting Room at the FCC headquarters building in Washington, DC. A full video transcript of the meeting is available at the FCC website at http://www.fcc.gov/encyclopedia/technology-advisory-council together with a copy of all materials presented at this meeting. In addition, all materials presented at this meeting are included in electronic form in an Appendix to this document.

In accordance with Public Law 92-463, the entire meeting was open to the public.

Council present:

Shahid Ahmed, Accenture	Kevin Kahn, Intel Corporation
Mark Bayliss, Visual Link Internet, Lc	Gregory Lapin, Independent Consultant
Nomi Bergman, Bright House Networks	John McHugh, OPASTCO
Peter Bloom, General Atlantic	Milo Medin, Google, Inc
Greg Chang, YuMe, Inc.	Anthony Melone, Verizon
kc claffy, UC at San Diego	Geoffrey Mendenhall, Harris Corporation
David Clark, MIT	Randy Nicklas, XO Communications
Lynn Claudy, National Association of Broadcasters	Mark Richer, Advanced Television Systems Committee, Inc.
Marty Cooper, Dyna LLC	Dennis Roberson, Illinois Institute of Technology
Richard Currier, Loral Space and Communications	Jesse Russell, incNetworks
Brian Daly, AT&T	Marvin Sirbu, Carnegie Mellon University
Adam Drobot, OpenTechWorks	Kevin Sparks, Alcatel-Lucent
Tom Evslin, Evslin Consulting	David Tennenhouse, New Venture Partners
Charlotte Field, Comcast Corporation	Jack Waters, Level 3 Communications LLC
Mark Gorenberg, Hummer Winblad Venture Partners	Joe Wetzel, EarthLink, Inc.
Russ Gyurek, Cisco Systems	Tom Wheeler, Core Capital Partners, LLC
Dale Hatfield, Silicon Flatirons Center for Law, Technology, and Entrepreneurship University of Colorado at Boulder	Robert Zitter, Home Box Office

FCC staff attending in addition to Walter Johnston and Julius Knapp included:

Michael Ha, FCC	Ahmed Lahjouji, FCC
Chris Helzer, FCC	Robert Pavlak, FCC
Gregory Intoccia, FCC	Henning Schulzrinne, FCC
Daniel Kirchner, FCC	

Tom Wheeler began the meeting by noting the FCC Chairman Genachowski would be attending this session and the order of presentation would be changed slightly to accommodate his participation.

Chairman Genachowski addressed the Council noting that the U.S. was now ahead in mobile technology with the majority of smartphones now running on U.S. designed platforms. The Chairman complimented the TAC on work done last year. He noted that as a result of the TAC, an Executive Order had been passed allowing federal lands to be more easily used to support broadband deployment. The TAC has also recommended a focus on small cell deployment, identifying 3550 GHz as one opportunity. He noted that the President's Council of Advisors on Science and Technology (PCAST) had also recommended the use of small cell technology in making efficient use of spectrum. He noted the important recommendations the TAC had given on PSTN transition issues and referenced a talk that Sharon Gillette, Chief, Wireline Bureau had recently given on this subject. (A copy of the talk was distributed to members and is attached herein.)

Members of the designated work groups of the TAC then went through a series of presentations describing work in progress. By agreement, to accommodate the schedule of the Chairman Genachowski, discussion was held until all presentations were given. (A copy of all presentations attached herein.)

The PSTN A workgroup (legacy transition) presentation evoked the following discussion:

- It was noted that it is important to maintain critical legacy infrastructure and that databases play an important role in this. We need to pay attention to these dependencies.
- It was also argued that in the future, services will be provided by "over the top providers" as opposed to legacy environments where physical infrastructure providers are the norm. We should examine what we can and can't regulate.
- There was some discussion on interoperability and standards. Skype was cited as one instance where a mostly closed system exists without a disruptive effect.
- Large central databases in the present will give way to smaller more distributed environments. Email was suggested as an instructive example to study.
- One participant noted that regulating only infrastructure providers could prove dangerous since this is the group that must make the investment to take the legacy to the new.
- Privacy interests were cited as a concern in the migration to the new environment.

The PSTN B work group (next generation) presentation drove the following points:

- We need a schema for identifiers that interact with devices that use other identifiers
- On QOS, the focus should on defining network to network interfaces
- Payment systems should use private IP networks for QOS/Security
- The transition from numbers is happening quickly and it was suggested that numbers be encapsulated in domains: e.g. number.PSTN. ENUM was given as an example of a step in the right direction.
- Discussion took place on the issues of over the top service providers and infrastructure service providers and whether the FCC should be concerned about equality of opportunity to implement QOS. In the public Internet today, is end to end QOS a concern?
- Underlying databases must be richer to discover what can talk to what or who pays for it. New ideas come from new connections with old things.
- Voice was noted as the past application, QOS needs to be applied to new data services as well.
- Focus should be on things we can do to accelerate the transition. What will be the stranded users and applications in the transition?

Multiband Devices Working Group presentation stimulated the following:

- Future work on cognitive radio and smart antenna may overcome spectrum shortage issues.
- It is important to focus on TDD as well as FDD for the future since it is getting difficult to find spectrum for FDD.
- There is a friction between the desire to allocate smaller channels for more competitive auctions versus larger channel bandwidths to support the needs of broadband systems.

Wireless Security and Privacy Working Group presentation generated the following observations:

- The more useful and productive a device is, the harder it is to secure
- Security is becoming a higher cost burden on the innovation process
- It was noted that the Defense Department wants a hardened version of Android and this should be seen as a „canary in the coal mine'
- There is a new role for the FCC in security, if FCC mandated hygiene in civilian infrastructure, all would conform, government has ceded this to industry
- Looking at another dimension; who is doing the work? In the hacker community you have organized hackers, organized crime, and state sponsored element of this.
- Security is broad area, we are just talking about networks, and this issue is much broader than a network issue
- When government collects data, open access rule makes this data public, we need to look at distinctions between right to know and privacy

M2M Work Group:

- M2M group had conducted a number of interviews with subject experts in different sectors of M2M
- Some experts believe that M2M will be a larger application than even mobile is at present
- We will need new forms of licenses, different than the exclusive use licenses predominant today. We need new forms of licenses to support innovation in this area.
- Examples were given of companies today dealing with issues of IPv6, M2M, and devices numbering in the millions. These companies today are facing interesting challenges.

Chairman Genachowski closed the meeting by noting that this form of meeting with leading executives and industry streamed to the public happens nowhere else in the world. This type of activity drives the American innovation machine going forward. In addition, the TAC work is both relevant an aligned to the agenda of the FCC. The areas the TAC is working on are so critical that the TAC was urged to develop actionable recommendations for the next meeting in September. The Chairman cited the security work as being especially critical. It was further suggested to the TAC that it would be ideal to have not only recommendations but things put into practice prior to the next meeting.

The Meeting was adjourned at 4:00 pm.

Walter Johnston, Chief/ECD
FCC

6-27-12 Presentations

Charter

The *Receivers and Spectrum* Work Group will tackle the issue of the role of receivers in ensuring efficient use of the spectrum and how to avoid potential obstacles to making spectrum available for new services.

Working Group Members

- Lynn Claudy
- Richard Currier
- Dick Green
- Mark Gorenberg
- Dale Hatfield
- Greg Lapin
- Brian Markwalter
- Geoffrey Mendenhall
- Pierre de Vries
- Bob Pavlak
- Julie Knapp
- Dennis Roberson

Case Studies

- Understanding the spectral areas where receiver issues may be pronounced and / or where there is considerable interest in re-farming or sharing spectrum, and where the spectrum is not the focus of current rule making [or rule-making or rulemaking].

Case Studies

Areas of Focus

- DTV
  - Channels 2-6, surrounding 72-76 MHz
    - Evaluate optimum use of TV channels 2-6 after auctions and spectrum repacking
  - Rest of TV Channels 7-51
    - Examine DTV receiver interference immunity improvements for changing RF environment (new unlicensed devices, re-packing DTV band spectrum to mobile broadband, mobile broadband in adjacent bands, introduction of mobile DTV services)
- 2.4 GHz Unlicensed / Broadband Radio Service (BRS)/ Educational Broadband Service (EBS) / Terrestrial Mobile Satellite Service (MSS)
  - 2.4 GHz receivers may need to be operable in the presence of terrestrial MSS base stations and BRS/EBS handset transmissions (2495 MHz and above)
  - Could leverage fact that most 2.4 GHz chipsets have common Tx/Rx path to improve receiver performance by mandating better transmitter OOB attenuation
  - FCC should evaluate / test samples of 2.4 GHz products to assess receiver selectivity and rejection of unwanted emissions from neighboring BRS/EBS band

Case Studies

Areas of Focus

- 3550 – 3650 MHz military radar and non-federal FSS earth stations
  - UK test results of co-channel interference from radars (above 2.7 GHz) into mobile broadband systems (2.6 GHz UMTS & WiMAX) suggests that the size of exclusion zones in US can be reduced (requires more modeling and testing), with appropriate C/I protection
  - Could use low power small cells in 3550 – 3650 MHz
- 2700 – 2900 MHz federal radars
  - UK encountered unanticipated interference from planned wireless broadband deployments in the 2500 – 2690 MHz band to radars operating in the 2700 – 2900 MHz band, requiring the addition of filters to the radars
  - NTIA / FCC investigation underway into a few cases of interference to weather radars in the 2700 – 2900 MHz from broadband radio systems in the 2496 – 2690 MHz band
  - FCC / NTIA should study causes of interference between wireless broadband and radars, and consider if receiver interference limits would be appropriate

Receiver Enhancement Areas

Problem

- What are potential approaches that might be deployed to enhance spectrum utilization through the improvement of our approach to the receiver side of wireless systems?
- Receivers today are developed without adequate knowledge of future environment performance constraints

Ideas Evaluated

- Standards Based Regulated Receiver Performance – List of Applicable Standards (potential of FCC Database)
- Best Design Practices / R&D Investments to Enhance Receivers
- Interference Limits Policy Approach
- [Status Quo]

Standards Based Regulated Receiver Performance

Progress

- Inventoried standards and regulations for RF performance of television receivers
- Initial evaluation of standards based regulatory approach

Benefits

- Direct approach to resolving receiver issues
- National Technology Transfer & Advancement Act: Federal agencies are to use technical standards developed by voluntary, consensus standards bodies (e.g., OMB Circular A-119)

Key Enablers

- Industry consensus captured in a standard, referenced by regulation, is preferable and more flexible than incorporating a similar level of detail directly in regulation
- Ensuring that all essential stakeholders are “at the table”

Actionable Recommendations

- Develop clear project definition to begin standards work. Define scope and purpose of the standard. Is the RF environment in which the receiver will operate known, both present and future?
- Organize cooperative effort of FCC, NTIA, industry groups, service providers, and equipment manufacturers
- Explore the potential for the FCC to provide a web accessible standards repository
- Continue examination of the root causes of receiver susceptibility to interference, and the role that public and private standards play in receiver performance

Best Design Practices / R&D Investments

Progress – Identified Key Issues

- Legacy receivers are expected to operate in new and changing RF environments
- Knowledge of future spectrum allocations helpful to setting receiver standards
- Primary design challenge is front-end stage, which can be overloaded by strong interference

Benefits of Best Design Practices and R&D Investments

- Improved resistance to signals from adjacent channels and adjacent services (out-of-band)
- Free up spectrum by reducing guard bands and taboo reservations
- More flexibility in assigning spectrum to adjacent services

Key Enablers

- Adaptive, low cost, low power Software Defined Receivers (SDR) with over-the-air upgrades
- Increased ability to withstand unwanted strong signals without overloading
- Improved front-end performance including dynamically tunable filters; adaptive antennas; advanced interference cancellation techniques

Actionable Recommendations

- Stimulate R&D investments into key enabling receiver technologies that allow a greater spectral density of signals
- Recommend minimum receiver performance levels by spectrum segment

Interference Limits Policy Approach

Progress

- Interference limits = interference an assignee's system should be able to tolerate; can only claim harmful interference if the limit is exceeded, and its performance degrades
- Have developed sample interference limits for TV bands, 2.4 GHz

Benefits

- FCC can manage Rx/Tx trade-off without mandated device performance standards
- Delegates optimization decisions to operators
- Provides certainty to licensees: future neighbors won't exceed known interference limits to receivers; won't be surprised by new constraints on transmitters
- Prevents low-selectivity receivers deployed next to currently-quiet band preventing future band reallocation to more intensive use

Key Enablers

- Incorporating interference limits policies into rules for new allocations

Actionable Recommendations

- Define interference limits for: unlicensed in 2.4GHz; incumbent assignments in 3550-3650; licenses in UHF incentive auction
- The concept of Interference Limits policy may be advanced by assuming a cellular infrastructure system as the de-facto near neighbor, subject to alternative agreement between the two neighbors and with appropriate guidance from the FCC

Summary, Conclusions and Next Steps

- Receiver performance and standards play a critical role in the efficient use of spectrum
- The challenges are not new (multiple FCC proceedings, workshops, etc.)
- Significant work has already been done on "interference protection criteria", but more band/service system analysis and testing, as well as future projections are needed
- Next steps:
  - o Further assessment of bands with near-term potential for receiver performance impact
  - o Determining how to project future spectrum plans, so industry can be more prepared
  - o Process of integrating "receiver performance" factors and the interests of all relevant partners into evolving standards
  - o Analyzing impact of adjacent cellular-based interference limits
  - o Provide actionable recommendation to TAC on an effective approach for receiver standards, interference limits, and their interaction and integration
  - o Analyze the role of enforcement and incentives in the receiver standards process

Discussion

Technological Advisory Council

Multiband Devices Working Group

27 June 2012

Charter and Working Group Members

- The Multi-band Devices Working Group will study the challenges in developing subscriber equipment that is capable of operating over numerous frequency bands.

- WG Chair: Brian Markwalter
- FCC Liaisons: Michael Ha, Chris Helzer
- WG Members:
  - John Chapin
  - Lynn Claudy
  - Marty Cooper
  - Jack Nasielski
  - Mark Richer
  - Jesse Russell
  - Peter Gaal
  - William Mueller

Problem Statement

- Diverse and Complex Frequency Options
  - 22 FDD bands, 11 TDD bands defined in 3GPP R10.6, and counting
  - 4 types of positioning (GPS, Glonass, Galileo, Compass)*
  - Multiple types of WiFi, BT, NFC, etc*
- Each carrier desires different combinations of band support
- International roaming further complicates the handset design
- Future spectrum allocation continues to be fragmented
- Spectrum Aggregation being standardized in 3GPP

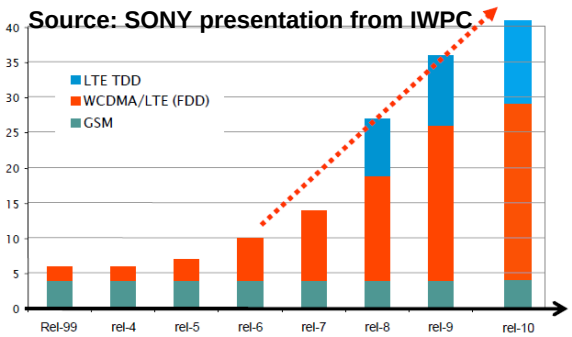

Number of Bands per 3GPP Releases

- *What is the expected roadmap for receiver improvements?*
- *How does that roadmap inform policy and industry decisions?*

* Note that multi-mode challenges are not addressed in this report as these services offered in globally harmonized spectrum

US Current and Potential Future Flexible Use Bands

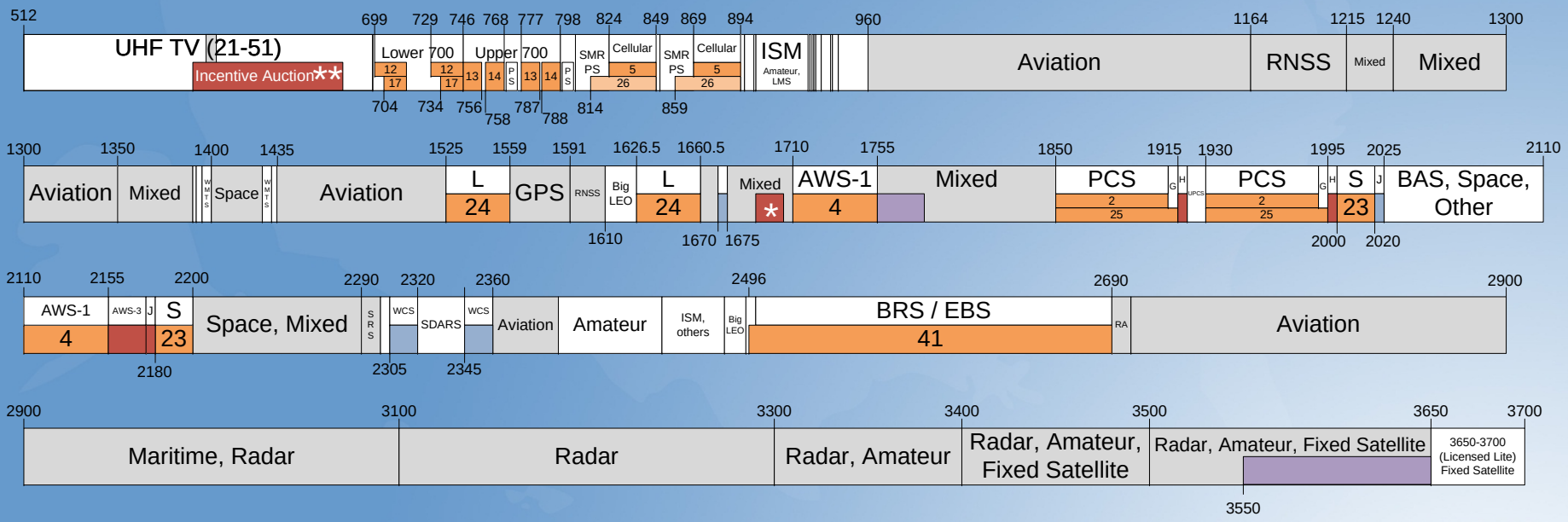

- 3GPP North American band
- 3GPP proposed North American band
- Other part 25 and 27 allocations
- Non-federal uses
- Federal uses
- Possible federal clearing or sharing
- Legislative mandate to auction
- * Legislation specifies 15 MHz between 1675 and 1710, frequencies not determined.
- ** Legislation specifies incentive auctions, specific frequencies depend on auction participation and FCC rules.

Reference Radio Architecture

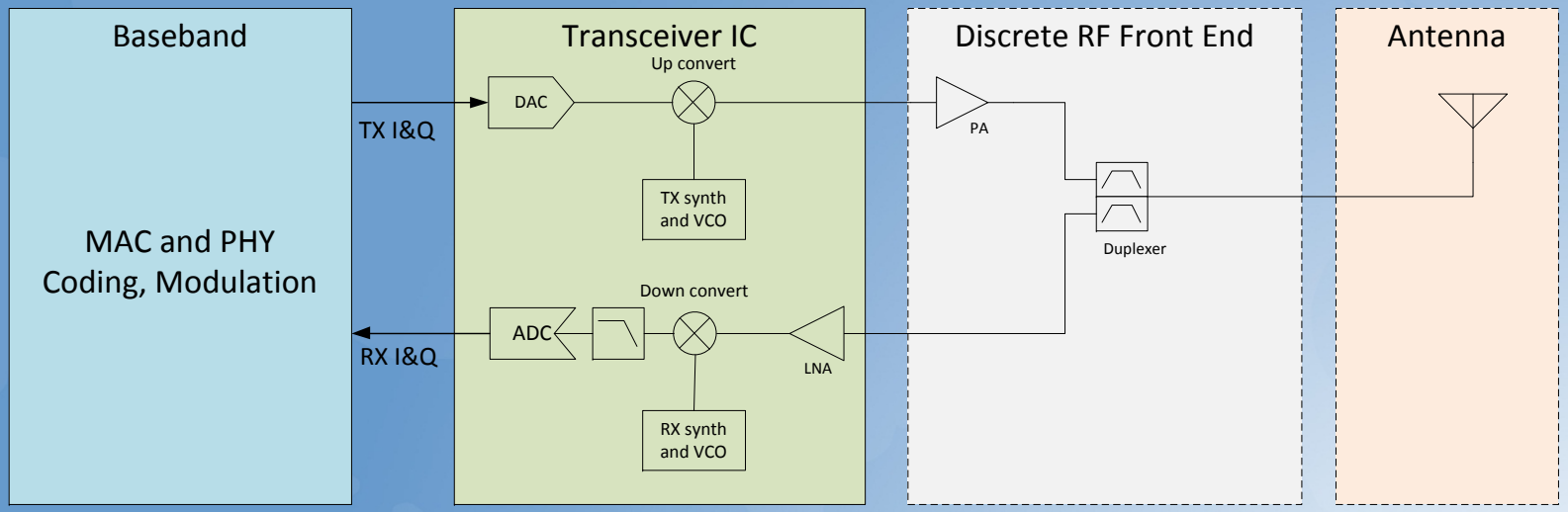

- Advancements in processing power of Baseband Chipset and increased density of CMOS silicon for Transceiver IC have enabled multi-band/mode implementation in a cost-effective manner
- Due to power handling, temperature variation, and other operational requirements, Discrete RF FE and Antenna elements have become the limiting factors of multi-band radios

GSM/LTE Architecture *

* Diagram does not include Wi-Fi, BT, NFC or broadcast radios

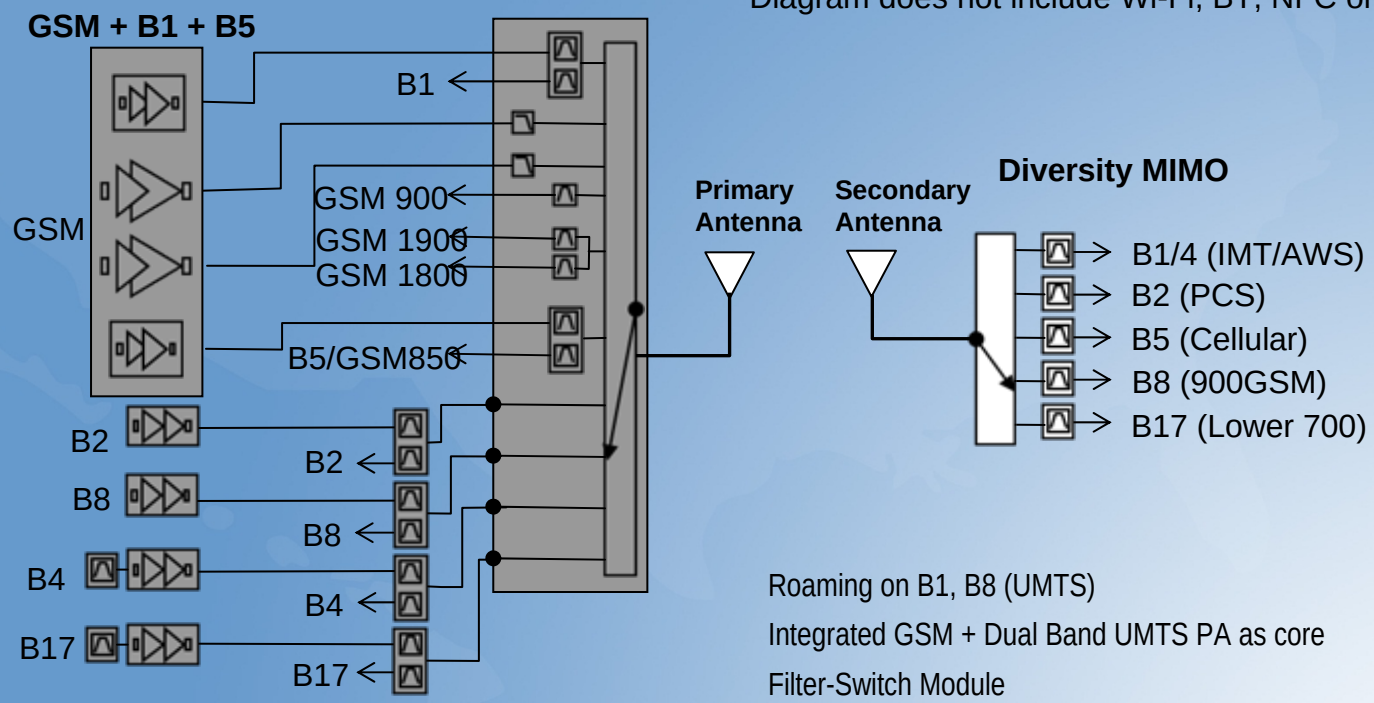

QB GSM / EDGE

HSPA+ on B2, B5

LTE on B4 (5,10), B17 (5,10)

Roaming on B1, B8 (UMTS)

Integrated GSM + Dual Band UMTS PA as core

Filter-Switch Module

PA-duplexer chains for other bands;

Diversity on data bands

Tx filtering only on LTE bands

CDMA/GSM/LTE Architecture

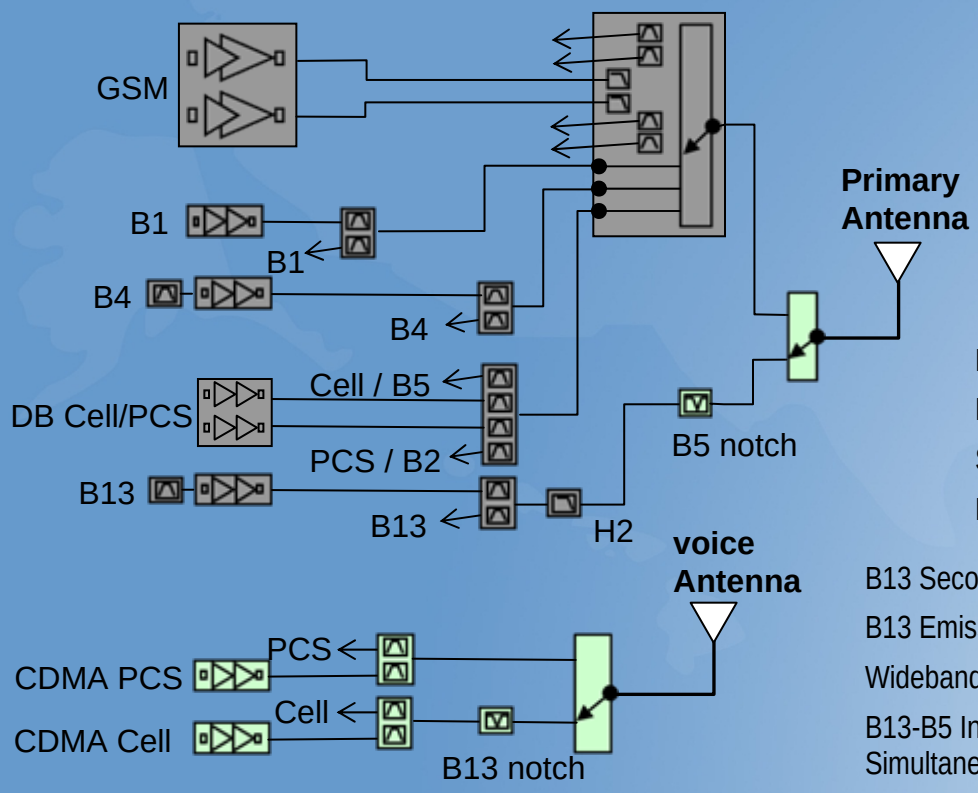

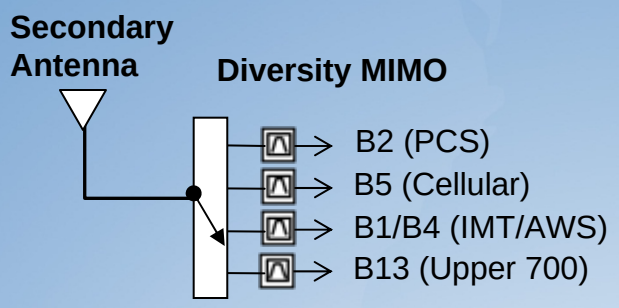

EV-DO / 1xRTT on B2, B5

LTE on B13 (10), B4 (5,10)

Separate 1xRTT for simultaneous voice and data on cell, PCS

Roaming on GSM, B1 (B8 capability may also be included)

B13 Second Harmonic interaction with GPS (H2 filter)

B13 Emissions into Public Safety Radio (NS_07)

Wideband antenna 757-2170 MHz

B13-B5 Intermodulation distortion interaction necessitates notch filters for Simultaneous Voice-Data

Dual radio chains for Simultaneous Voice-Data; 3rd antenna needed

Proposed Diplexer Architecture for Carrier Aggregation

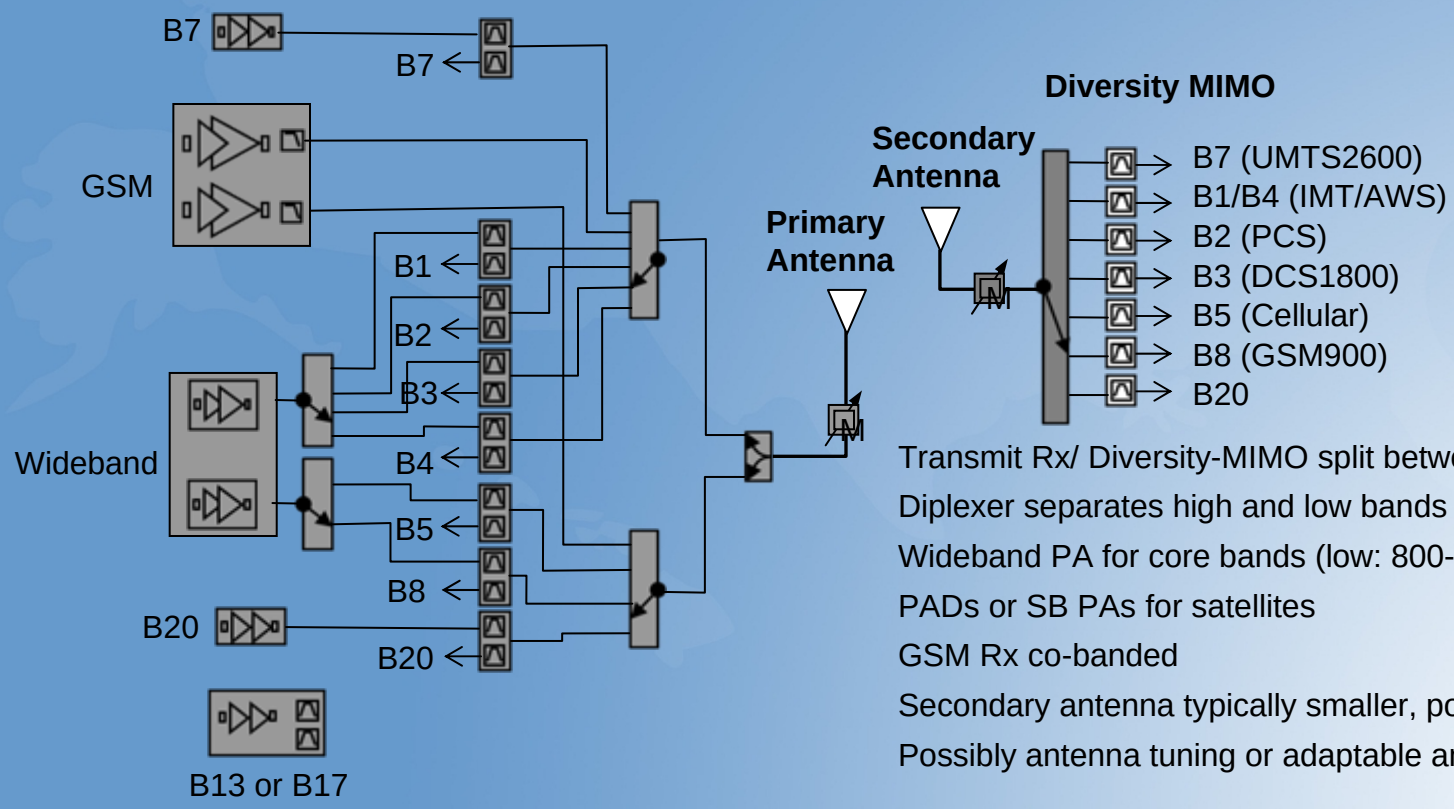

Transmit Rx/ Diversity-MIMO split between antennas

Diplexer separates high and low bands on primary

Wideband PA for core bands (low: 800-1000, high 1700-2000)

PADs or SB PAs for satellites

GSM Rx co-banded

Secondary antenna typically smaller, poorer performance

Possibly antenna tuning or adaptable antenna

Future Multi-Band Radio Architecture

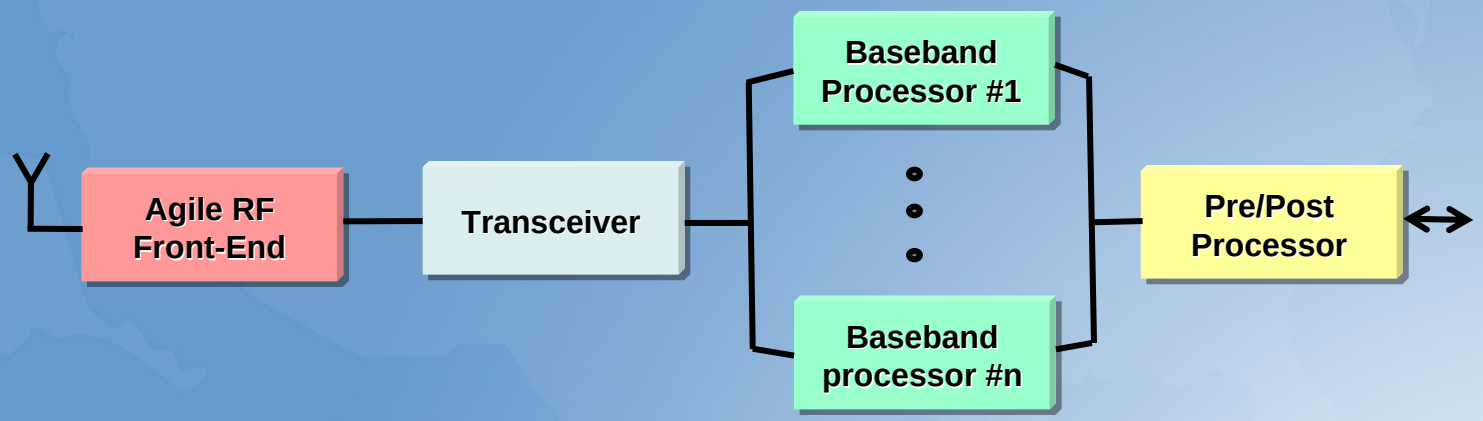

- Agile RF front-end band selection process: dynamic RF band selection
- Transceiver processes selected band : RF wide-band processing
- Programmable baseband processing: concurrent baseband channels processing
- Channel data aggregation: pre/post processing to align and aggregate data from different channels for enhanced throughput to/from the handset
- Transition from present to future architecture will occur incrementally as component performance evolves and digital processing continues to embrace more of the subscriber unit

Breakout of Future Investigation

- Antenna
  - Wideband
  - Multi-tap
  - Tunable
- Tunable Elements
  - Variable capacitors (MEMS, switch banks, BST, etc)
  - Selectable elements (filter / duplexer banks)
- Analog/Digital Converter (w/ PA)
- Processors
- Others
  - Switches (MEMs, ohmic MEMs, improved semiconductor: higher isolation, lower loss, more throws)
  - Linearizers (Digital PreDistortion, ET as linearizer, etc)
  - Transmit MIMO / Spectrum Aggregation
- Multi-mode Support
- What are the key challenges of agile multi-band radio?

Future Policy Considerations

- Policies that consider receiver performance and operation in a dynamic RF environment are appropriate for maximizing spectrum efficiency

- Technology time frames and policy relationship
  - 1 to 3 years – technology available today, short term proceedings such as AWS-4
  - 3 to 5 years – technology visible today, proceedings such as statutory auction deadlines
  - 5 or more years – predicted technology, long term policies should align with roadmap

- Policies on research and accelerated development of software defined radio and downloadable applications should be encouraged

Technology Advisory Council
PSTN Transition

Meeting

June 27th, 2012

PSTN Transition - Group A

(The “A Team”)

- Daniel Kirschner (FCC)
- Henning Schulzrinne (FCC)
- Nomi Bergman (Brighthouse)
- Russ Gyurek (Cisco)
- Anthony Melone (Verizon)
- Charlie Vogt (Genband)
- Joe Wetzel (Earthlink)
- Marvin Sirbu (CMU)
- Jack Waters (Level 3)
- Harold Teets (TW Telecom)
- John McHugh (OPASTCO)

With contributions from other technical experts

PSTN A vs B Work Group Simplification (June)

Initial Group Assignments
PSTN A
Copper Retirement
PSTN Users
Interconnection
Database Transition
PSTN B
Interconnection
Numbering
Database Transition
QoS
Robustness and Public Safety

Consolidated overlapping assignments into single Work Groups

June Group Assignments
PSTN A
Copper (Retirement) Reuse
PSTN Users
Interconnection
Database Transition
PSTN B
Interconnection
User/Service/App Identifiers
Database Transition
QoS
Robustness and Public Safety

Questions for Group A

- Copper Retirement:
  - *What services remain dependent upon the existing twisted-pair copper plant? What services may no longer be available if twisted pair copper is no longer offered from customer premises to the wire center? What non-voice services and features will not work without modification in an all IP-based network?*
  - *What substitutes exist for services that may not be able to transition from the analog circuit-switched network? What is the cost or technological impact of the substitute?*
  - *As landline voice service decreases, what fraction of copper loops is left idle, rather than serving as DSL loops or being put to other use? How is non-voice demand for copper loops expected to change over 5-10 years?*
  - *Are there practical uses of abandoned copper and if so, what are the uses, and what are the costs (or cost drivers) and technological impediments to putting such copper to use?*

- Copper Retirement- *Answers/Recommendations*:
  - More Appropriate: Copper "replacement or transition"; retirement is premature. (*Topic was addressed in TAC 2011*)
    - Many services require copper: Alarm/security circuits, elevator phones, ringdown circuits, etc. Transition will take place over time
    - Technology advances push capability of Copper (VDSL2 vectoring, bonding technologies, advances in EoC, etc)
    - *Note: NOT all Copper is equal. Providing >10mbps requires investment and upgrades*
  - Our working group sees a productive, current role for copper infrastructure. Longevity will be determined via the cost/benefit comparison based on bandwidth needs (service requirements)

Questions for Group A

- Interconnection:
  - *What methods have evolved for the exchange of traffic in the hybrid IP-based/circuit-switched network? How will those methods transition as the network shifts to being wholly IP-based?*
  - *How might interconnection requirements and provisioning evolve as consumers adopt new communications technologies, such as HD voice or video?*
  - *Do technological interconnection issues exist at higher protocol levels, e.g., SIP?*
  - *What architectures might evolve to support VoIP interconnection and interconnection of advanced communications services? How would architectures function at different network layers (e.g., MPLS, IP, SIP)?*
  - *Develop a detailed matrix of technical issues that need to be worked out for an IP interconnection framework, the entities who would need to be involved in each aspect, and preliminary thoughts on possible technical solutions.*

- Interconnection: Not a single (simple) solution
- IP-to-IP interconnect for ***Data*** and ***Internet*** has been happening for 20+ years
- IP-to-IP Interconnect for ***Voice (apps)*** now being implemented globally at a rapid rate
  - IP Interconnect, VoIP Peering, IPX, etc - Multiple Standards Bodies engaged
    - ITU-T, ATIS-PTSC, I3, GSMA, FCC, CRTC, CableLabs, 3GPP
  - Implementation outpacing regulation
- IP Interconnect for VoIP will be transformational as it will eliminate need for legacy, post-divestiture structures such as LATAs, Rate Centers, Routing rules, etc.
- Parallel FCC initiatives
  - FCC Rulemaking on IP-to-IP Interconnect (USF/ICC Report and Order and FNPRM)
  - TAC Working Groups Assigned and will make recommendations
- Other market forces and considerations
  - Interconnection type (Public vs Private) needs to be evaluated for the needs of Voice and Apps
  - Modernization (aging equipment, automation, new technical options, etc.)
  - New interconnect biz opportunities: Video, Messaging, UC in general plus VoLTE
  - Potential implications to intercarrier compensation

PSTN Interconnection	VoIP Interconnection*
• Rules in Place	• Clarification needed with respect to voice traffic rules
• POI Rules in Place	• POI arbitrary
• Interoperability standards	• Interoperability concerns
• Compensation Defined	• Contractual arrangements
• Traffic exchanged is voice	• *Apps can be voice, data, video, SMS, MMS
• Dedicated direct connection	• Could be direct or indirect interconnection

IP Interconnection is transformative and has cross dependencies and impacts on Databases, QoS, PSTN User features, Regulation, Intercarrier compensation, etc

Interconnection: Read-out

- PSTN Working Groups A and B have consolidated the interconnection work into Group A
- Preliminary analysis has been worked with the sub-group
  - Reviewed questions from both working teams and developed preliminary answers
  - Developed interconnection scenarios with diagrams to scope the impacts
  - Consulted with experts to advise on industry standardization work
    - ITU, ETSI, GSMA, CableLabs, ATIS, i3 Forum, SIPConnect, etc
  - Drafted the Matrix of Considerations for implementing VoIP* Interconnection
  - Distributed synopsis of Further Notice on IP-to-IP Interconnection
- Next Steps:
  - Explore additional apps (video conferencing, OTT etc.) for additional QoS requirements
  - Seek additional industry review to validate and identify additional considerations
  - Finalize Matrix of Considerations, what are M2M impact/requirements
  - Provide Final Answers to Work group questions.

Questions for Group A

- Database:
  - *What legacy databases will need to transition to a future all-IP environment?*
  - *How will databases that are essential to the operations of the PSTN need to evolve to operate in an IP-based network?*

Group A Database Focus

- Overview of all relevant PSTN related DB's (see appendix)
- Transition/Post PSTN needs: compatibility, interoperability requirements
- Market drivers
- Top 4: LNP, DNS, ENUM (E.164), Geo-location

Database Discussion – Group A

- Traditional PSTN databases previously deployed may lose their relevance as we move forward to IP-based communications
- Database information may no longer be solely based on geographical constructs or numbers
- Multiple private databases (e.g. ENUM, MAC addresses) may need to report up to a master-type "Mediation" database to ensure "any-to-any" reach-ability regardless of network, location, or end device used
    - Similar functionality exists with DNS in the Internet
- Concerns over security / confidentiality of information populated within these databases – (e.g. who has access to the info, anonymity issues, how is 9-1-1 affected)
- Database discussion linked to numbering plan working group (Group B)

Summary

- Copper will continue to play a role during and after the transition.
  - Issue: All copper is not equal in terms of BW capability
- Interconnection:
  - Many options and methodologies from tech standpoint
  - What “needs” be connected in future (beyond voice)
  - Application interconnection is the right focus
- Database
  - Many PSTN databases in Existence
  - Team will focus on identifying needs to interoperate, and backwards compatibility needs, which databases will play role post-PSTN
- The group has begun some discussions about the future of broadband access technology including the ability going forward to support competition
- Looking forward to advice from FCC and fellow TAC members on all issues

Technological Advisory Council

Wireless Apps and Services (M2M) Workgroup Friction Point Analysis

TAC Wireless Apps and Services (M2M) Working Group

Name	Company
Shahid Ahmed	Accenture (Workgroup Chair)
Kevin Sparks	Alcatel-Lucent
Bud Tribble	Apple
Tom Evslin	Evslin Consulting
Peter Bloom	General Atlantic
Milo Mendin	Google
Robert Zitter	HBO
Deven Parekh	Insight Venture Partners
Glen Tindal	Juniper
Dave Tennenhouse	New Venture Partners
Wesley Clark	Wesley K. Clark and Associates
Greg Chang	Yume
Walter Johnston	FCC Laison

M2M Working Group Mission Statement

The TAC Machine to Machine (M2M) Working Group's mission is to accelerate the growth of the M2M market through education, policy development, and the reduction of barriers to entry for new entrants.

Objectives:

1. Identify legacy regulation that impedes growth in the new M2M paradigm
2. Provide guidance and recommendations for industry groups on standardization, privacy and security
3. Identify economic enablers that will act as catalysts for growth and job creation
4. Identify specific industry vertical issues and challenges
5. Identify metrics to gauge how the M2M market and traffic is growing and the impact it will have on wireless networks
6. Recommend actions to the FCC Technological Advisory Council
7. Facilitate the conversation with the M2M industry and community

Friction Point Analysis Objectives

1. Derive common definition of M2M
2. Identify top verticals (near and future term)
3. Identify key challenges/inhibitors of M2M growth
4. Identify catalysts to encourage M2M growth
5. Provide set of recommendations

Our Approach

Initiated survey of stakeholders in relevant sectors and targeted ~30 companies. To date the M2M TAC group has interviewed over a dozen companies and surveyed key issues impacting vertical opportunities: Regulator, Technical, Certification, Standards, Cost, and Others.

Create Interview Target List and Questions → Conduct Company Interviews → Consolidate and Summarize Findings → Developed Final Recommendations

Participants

Company	Description	Vertical
Sprint	Network Operator	Multiple
verizon	Network Operator	Multiple
KORE	MVNO	Multiple
Qualcomm	Devices and Platforms	Multiple
nest	Solution Provider	Home Automation
OnStar	Solution Provider	Telematics
EATON	Devices	Energy
Southern Company	Utility	Energy
TELCARE	Solution Provider	Healthcare
Sempra Energy	Utility	Energy
ERICSSON	HW and Platforms	Multiple
Google	Solution Provider	Multiple
at&t	Network Operator	Multiple

Questions Asked

1. How do you define M2M?
2. What do you believe are the key verticals?
3. What are some inhibitors to M2M growth?
   a. Regulatory (i.e. legacy regulations that inhibit M2M)
   b. Standards
   c. Technical
   d. Security
   e. Certification
   f. Other
4. What do you think the FCC should do that could help remove some of these inhibitors or create a catalyst for M2M growth?

M2M Characteristics and Definition

- M2M revenues estimated to be $1.2 T by 2020
- Broad range of applications and vertical sectors:
  - Sector Specific Challenges
  - Dominated by 2G
  - Common platform “one size fits all solutions” not likely
  - Challenging cost, technical and service issues
  - Extensive use of devices in both licensed and unlicensed spectrum
  - Wide variances in requirements of bandwidth, data consumption and Quality of Service

Source: OECD 2012

M2M is Starting to Gain Traction with subscriptions Increasing by 4x between 2010 and 2016

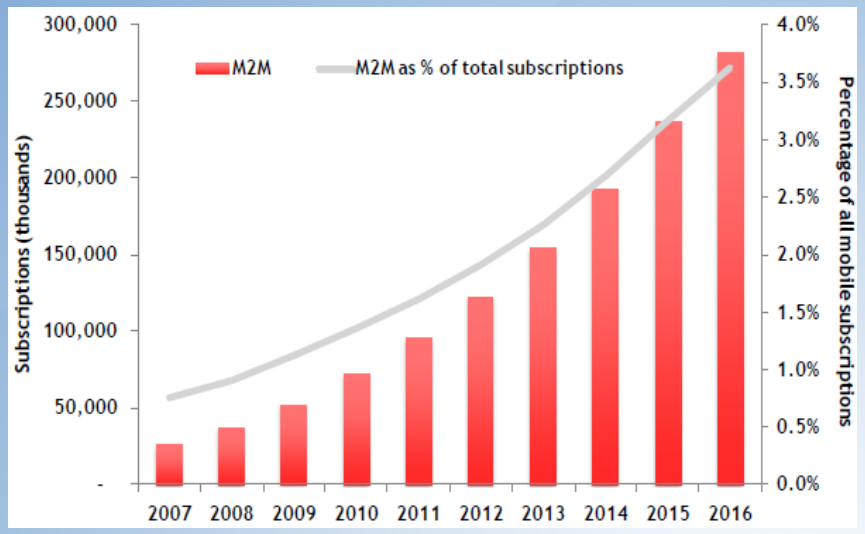

Source: Pyramid and Accenture Research

Multiple Definitions Exist

- ***OECD Definition:***
  - **Devices actively communicating using wired and wireless networks, are not computers in the traditional sense and are using the internet in some form or another.**

- *Connected Definition:*
  - A purposeful device connecting back to another device or server through a dedicated often restricted wired or wireless connection.
  - The device must take the information and do something useful with the data to make intelligent decisions.
  - Any device to device wireless connectivity beyond a mobile phone, computers, tablets, and handhelds that require user intervention are not counted.
  - Measured by the number of lines or data plans.

- *Use Case Definition:*
  - Different applications across vertical markets with common layers and building blocks: Device Hardware, Wired or Wireless Modem, Network, Middleware, and Application.
  - Customized by vertical applications, an automobile differs from a medical device.
  - Divided into devices that are consumer centric services such as eReaders, Business to Business and Business to Consumer services such as healthcare.
  - M2M is mobilizing mobile data collection and management.

Initial Observations – *Challenges and Inhibitors*

Regulatory

- M2M margins very tight and rate/billing plans need to take this into consideration
- Regulations and certifications vary by country (e.g. how long can I store patient data - HIPA?)
- Requirements differ between use cases, is eCall required on every voice capable device?

Standards

- Proprietary protocols stymie innovation and growth where open architecture should be used
- Depending on the vertical, standard bodies creates multiple competing standards without interoperability
- Some applications can drive standardization process, others more dependent on development of standards to scale

Technology

- Uncertainty of technology roadmaps and pricing (2G legacy, 4G or future disruptive technology)
- Commercial networks are not secure
- Proprietary solutions needed for low latency (~10 milliseconds) critical solutions
- Expected billions of devices increases demand for IP addresses and IPv6
- Lack of pervasive connectivity requires investing in network infrastructure (Wi-Fi)
- Cost and time spent of developing new wireless modules for embedded devices
- Lack of engineers and companies that understand wireless, radios, and antennas.

Certification

- Serial certification by multiple federal agencies required for some sectors (e.g. health and FCC)
- Rigid HW certifications but there is a lack of testing for applications
- Lack of guidelines on certification

Other

- Lack of coverage in rural areas
- Many businesses do not value cost savings with longer payback periods
- Data ownership issues as machines interconnect. Who owns data: end user, each connecting entity? How are data rights granted?

Initial Observations – *Catalysts for Growth*

Regulatory

- Keep new regulations at a minimum
- Remove Friction, and open regulation to recommendations from Industry/Public

Standards

- There is a need for standards around ***applications*** platforms not just hardware
- Create a database or forum to open communication between global standards bodies

Technology

- Provide access to technology roadmaps
- Quality of Service for Mission Critical applications/SLAs
- Commitment to long term service support

Certification

- Create a “Network Safe” Certification
- Guidance for companies to build devices so that they pass certification the first time
- Common certification process across multiple carriers

Education

- Funding and encouragement for engineering and science education to increase America’s competitiveness with other regions in the world
- Education of the public about benefits of M2M technology to drive adoption

Other

- Address spectrum refarming and 2G sunsetting with one national 2G network
- M2M driven by compliance and cost savings
- Deliver simplicity and trust
- Allow for more flexible billing strategies

Initial Considerations

1. Create a Certification Lite “Safe Network” to enable lower cost solutions (devices and applications)
2. Work as an industry to show technology roadmaps (e.g. when is 2G being sunset?) and price-points to guide application vendors
3. Provide a guidance on what defines “well behaved” applications
4. Provide exceptions for access to spectrum for critical infrastructure providers
5. For 2G sunset, consolidate into one network – M2M Network?
6. Investigate feasibility of Spectrum set aside. Look at leveraging TV White Space
7. FCC should work with peers around the world to enable globalization
8. M2M should not be included as part of Universal Service Fund tax structure (FNPRM)
9. Consider seeding certain vertical market to spur growth e.g. mHeatlh

Next Steps

1. Identify near term actions FCC/industry can undertake to grow M2M market

2. Develop education material describing opportunities and issues

3. Target potential policy issues requiring attention to accelerate market

4. Develop workshop focused on convergence of sector/carrier/agency issues

PSTN B Successor Networks Working Group

Co-Chairs:

Brian Daly, AT&T

Tom Evslin, Evslin Consulting

PSTN Successor Infrastructure Work Group

- The PSTN Successor Infrastructure Work Group will focus on identifying key elements essential to an IP-based real-time communications infrastructure. As consumers and businesses turn to other networks to replace functionality previously provided by the current voice network, questions arise as to how those networks can replicate the best characteristics of the circuit-switched network while taking advantage of their advanced technological underpinnings. Successor networks face new quality-of-service and robustness challenges. They may depend upon new databases and take advantage of new interconnection standards. The work group will look past the challenges of transitioning from the legacy circuit-switched network, and focus on the technical characteristics and user experience of successor networks. The work group will make recommendations to the Commission to identify challenges to the effective performance of successor networks.

PSTN A & B Work Group Simplification

Initial Group Assignments
PSTN A
Copper Retirement
PSTN Users
Interconnection
Database Transition
PSTN B
Interconnection
Numbering
Database Transition
QoS
Robustness and Public Safety

Consolidated overlapping assignments into single Work Groups

June Group Assignments
PSTN A
Copper Retirement
PSTN Users
Interconnection
Database Transition
PSTN B
Interconnection
User/Service/App Identifiers
Database Transition
QoS
Robustness and Public Safety

Work Group Progress

- Held 4 conference calls:
  - Discussion on the questions tasked to the working group
  - Sub-team assignments were made
- Worked with PSTN A leaders to clarify and combine overlapping tasks
- Received input from ATIS on their focus group work on PSTN Transition
- Breakout sessions to address specific sub team focus areas

Identifiers for Users/Services/Applications

- **Champion**: Mark Bayliss
  - **Participants**: Kevin Kahn, KC Claffy, Mark Bayliss, John McHugh, Jesse Russell, Charlotte Field

- What changes might be expected in a numbering plan optimized for IP-based communications services? (For example, current numbering systems are tied to physical resources, such as lines, and are often service specific, e.g., SMS short codes.)
  - What are the obstacles to assigning numbers to users, analogous to how domain names are assigned, rather than to service providers?
  - Should number assignment need to retain a geographic component? For example, do numbers still need to be assigned to specific rate centers in an all-IP world?
  - How can the receiver of a call validate that the caller is authorized to use the number or other identifier ("caller ID validation")?
  - What role is ENUM going to play as a number mapping service as the numbering system evolves? Is there a need for additional or alternate solutions?
- How might technological changes drive signaling requirements and number translation capabilities?

Identifiers - Topics of Discussion

- Numbers will be just one kind of identifying scheme
  - Moving toward a set of identifier directories that will map you to the target
  - There will exist multiple mapping databases
  - Need some schema for this multiple disparate directories to communicate with one another
- Geographic-based Numbers will continue to be a gating issue during the transition as long as there are devices that use numbers as identifiers
- As we consider the identifiers we need to consider the Linkages between numbers and PSTN databases
- NANP resources exhaust sometime after 2042 per NANPA report 4/20/2012
- Non-geographic codes assigned for services like M2M forecasted exhaust is 2032
- E.164 to SIP mapping being done today using private ENUM type databases
- Concerns over Country Code 1 (NANP serves 19 countries)

Quality of Service

- **Champion**: David Clark
  - **Participants:** Kevin Kahn, Dale Hatfield, Joe Wetzel, Jesse Russell, Dan Reed

- How will the use of end-to-end IP connectivity impact QoS? Is there a need for defined call quality metrics? How can we properly measure and assess the difference in QoS in IP service relative to circuit-switched service? What are the complexities associated with measuring IP QoS?
- What entity or entities can best perform reliable, unbiased and comprehensive QoS testing? Can this be done by industry and/or government groups or labs and if so, do such groups/labs exist already?
- Can end-to-end QoS be provided across service providers? What models seem possible (e.g., DiffServ, resource reservation, separate physical, or L2 networks)?
- How would the use of multiple media (high-quality audio, video) impact QoS considerations?

QoS – Topics of Discussion

- QoS and interconnection are inter-related and many issues impact both groups
  - Voice Interconnection between carriers, without using circuit switched PSTN, has occurred for several years and is fairly mature in certain segments, such as inter-MSO connection
- Efforts should focus on defining the basics of interconnection - the NNI
- At the same time, there are several patterns of interconnection, and a lot of issues are being sorted out bi-laterally, or within specific groups
- There would seem to be a number of questions related to payment
- Current preference among major carriers to build a private, IP-based networks to carry voice, rather than carry the voice over their public Internet offering
  - While conventional operators have generally chosen to use managed, dedicated services for voice interconnection over IP, some interconnection already takes place over existing Internet peering and transit quite successfully
  - Given the declining proportion of the total amount of IP traffic that represents voice going forward, carriers may find ways to ensure QoS with segregated interconnection facilities

QoS – Topics of Discussion

- Evaluate performance (e.g. QoS) requirements on IP-based voice, reporting of any performance statistics, and QoS discrepancies
- Since private and OTT voice service will interconnect, will the same performance (QoS) requirements apply to both sorts of services? To what extent is the performance and QoS of the public Internet a matter that should be considered as part of the transition to an IP-based telephone system?

Robustness and Public Safety

- **Champion**: Brian Daly
  - **Participants**: John Barnhill, Dale Hatfield, Mark Bayliss, Marvin Sirbu, David Tennenhouse
- How will the transition affect network robustness?
- What will robustness likely improve or degrade in the transition?
- What technologies can improve network survivability? How effective are these technologies likely to be compared to existing PSTN survivability?
- Wireless
  - Backup power at base station and handsets?
  - Capacity vs. footprint tradeoffs
- Wireline
  - Backup power for both the network and home or small business environments?
  - What, if any, additional capabilities are needed from the underlying broadband network to enable 911 or other emergency services functionality that is at least equivalent to that offered by the existing system?
- **Next steps**: Need to review the December 14th workshop material

Participant	Work Group Assignment
KC Claffy	**Participant on Identifiers**, Interconnection
David Clark	**Leader of QoS**
Brian Daly	**Co-Chair Team B, Leader of Robustness and Public Safety**
Russ Gyurek	Co-Chair Team A
David Tennenhouse	**Participant Robustness and Public Safety**
Charlie Vogt (John Barnhill)	**Participant On Robustness and Public Safety**
Joe Wetzel (Chris Murray)	**Participant in QoS**
Mark Bayliss	**Leader of Identifiers, Participant Robustness and Public Safety**
Kevin Kahn	**Participant in QoS, Participant on Identifiers**
Tom Evslin	***Co-Chair Team B***
Dan Reed	**Participant in QoS**
Jesse Russell	**Participant in QoS, Participant on Identifiers**
Harold Teets	Participant in Interconnect and Copper
Charlotte Field	**Participant on Identifiers**
Marvin Sirbu	**Participant Robustness and Public Safety**
Henning Schulzrinne	Group B FCC Liaison
Daniel Kirchner	Group A FCC Liaison
Dale Hatfield	**Participant Robustness and Public Safety**
Dick Green	*(TBD – just joined the working group)*

Technology Advisory Council

Wireless Security and Privacy Work Group

Progress Report to the TAC

Meeting June 27, 2012

Work Group Membership

- Brian Daly – AT&T
- Greg Intoccia – FCC
- Kevin Kahn – Intel
- Ali Khayrallah – Ericsson
- Ahmed Lahjouji – FCC
- Dan Reed – Microsoft
- Randy Nicklas – XO Communications
- Kevin Sparks – Alcatel-Lucent (lead)
- Paul Steinberg – Motorola Mobility

Wireless Security and Privacy WG

Goals & Scope

- **Examine** security and privacy vulnerabilities of air interfaces used by commercial networks, **assess** how they are currently being addressed, and **recommend** what role, if any, the FCC should play
  - Expand beyond air interface (in coordination with the broader TAC) as appropriate
- Includes cellular and Wi-Fi wireless networks
  - Cellular and Wi-Fi
  - Networks and devices
  - Technical and operational/usage aspects
  - End user and network impacts

Wireless Security and Privacy WG

FCC Guiding Questions (1/2)

Overall

1. What are the chief areas of concern relative to the security of commercial wireless networks, and how would you prioritize them and why? [KS]

14. What roles should the FCC and other federal agencies play in these areas? [KS]

Security

2. What are the most significant security vulnerabilities associated with cellular and Wi-Fi air interfaces, and how effectively have they been addressed? [KS, KK-Wi-Fi]
3. Recognizing that today's mobile communication devices house multiple transceivers operating on multiple bands, what are the security vulnerabilities associated with multi-band devices, and how effectively have they been addressed? [AK]
4. What are the security features of today's wireless networks? [KS, KK-Wi-Fi]
5. What are the future security features expected for wireless IP-based technologies? [KS, KK]

13. What steps should be taken to ensure that the security capabilities, including security settings, of mobile communication devices are not compromised, either by an infectious code or user error?" [AK/KK]

[question owners]

Wireless Security and Privacy WG

FCC Guiding Questions (2/2)

Impact	6. What is the scope of potential vulnerabilities? For example, could security vulnerabilities lead to service outages? Hacks of private information? [KS]
Network Operations	7. How does the industry identify breaches in security? [BD] 8. What response systems are in place for dealing immediately with security attacks? [BD] 9. Are different levels of security available to users depending upon the type of application? For example, can public safety or critical infrastructure applications be provided with greater security than an ordinary smart phone? [BD]
Network Integrity	10. To what extent is jamming a concern and what has the experience been thus far? What is and can be done about this? [PS] 11. To what extent is theft of service a concern and have there been instances where this has occurred already? What can and is being done about this? [RN,DR]
Privacy	12. What are the most significant privacy issues from a wireless technology point of view, and how should they be addressed? [PS]

Wireless Security and Privacy WG

Structure and Progress

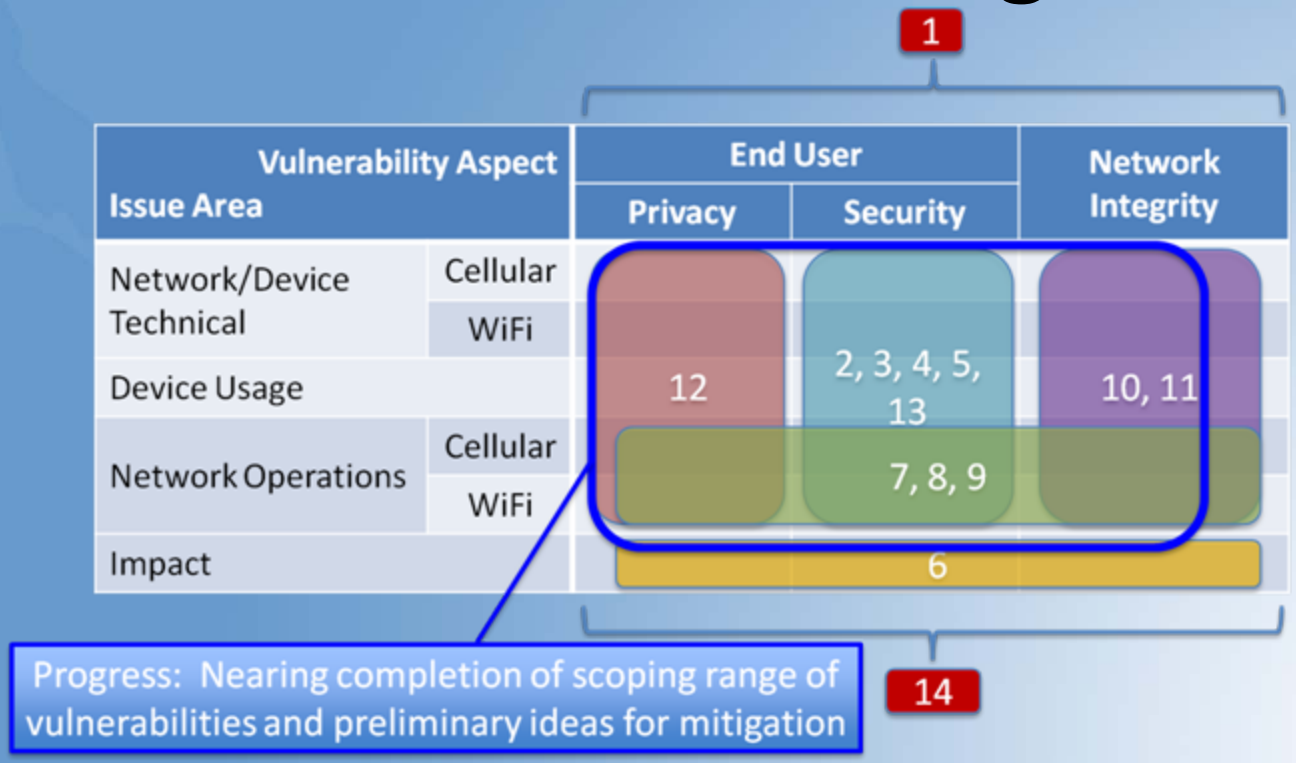

Progress: Nearing completion of scoping range of vulnerabilities and preliminary ideas for mitigation

Wireless Security and Privacy WG

Timeline

Phases

Wireless Security and Privacy WG

Key Vulnerabilities – Preliminary (1/2)

	Key Vulnerabilities	*Potential Mitigation*
Cellular	• Older generation cellular security – Weak encryption & authentication – Fake base stations – Multi-generational "bid-down" attacks • Insecure SMS used for mobile commerce or emergency messages	• Avoid or give user the option to block data usage of 2G GSM – rural areas, international roaming • Best practices guidelines on use of SMS for sensitive applications
Wi-Fi	• Open & weakly encrypted hotspots – Automated "sniffing", session hijacking • "Evil twin" masquerading hotspots – Credentials stolen via fake web pages	• Endorse and promote best practices for hotspot operators – Encryption, mutual authentication • User education on "safe Wi-Fi" – At hotspots and at home

Wireless Security and Privacy WG

Key Vulnerabilities – Preliminary (2/2)

	Key Vulnerabilities	*Potential Mitigation*
Devices/Usage	• Rich business/personal usage and data make mobiles attractive target • Open/diffuse apps environment – Malware, exposure via chain of apps – USB, SD card, Bluetooth, jail-break risks – Hacking of app data on server-side	• User security awareness education – Best practices, secure service options • Standards for trusted device execution environment – Execution, storage, user interface • Voluntary app trust certification
Network	• Denial of service attacks – Against networks, emergency services • Malware proliferation as a barrier to new services acceptance – mobile commerce, M2M	• Network & device based detection – Early detection & isolation • Secured access services

Wireless Security and Privacy WG

Next Steps

- Complete scoping vulnerabilities and mitigations in remaining topic areas
- Begin deeper-dive analysis of impact and mitigation alternatives
- Coordinate related/overlapping topics with other TAC WGs
  - e.g. M2M security aspects

UPenn End of the Phone System Conference
Sharon Gillett Remarks
Thursday, May 17, 2012

UPenn End of the Phone System Conference
Sharon Gillett Remarks
Thursday, May 17, 2012

Thank you Richard for that kind introduction. I'd also like to thank, in no particular order other than alphabetical, Amit Schejter and Kevin Werbach for inviting me to speak here today.

Partly, I'm thanking you for giving me an interesting proposition to take issue with: namely, that the phone system – whatever *that* means – is about to end. I'm going to explore three main points related to this proposition. First, that we should be speaking of a transition, not an endpoint. Second, that as this transition continues to unfold, federal and state governments have key roles to play in protecting consumers and promoting competition. And finally, that you should not worry about running out of interesting papers to write, because we have not yet run out of hard problems to solve, in particular crafting appropriate transitions for universal service and interconnection policies.

First, to the question of endpoints vs. transitions. To be sure, if the term "phone system" is meant to refer only to landline, circuit-switched phone lines, then indeed that system is shrinking. The FCC counted 192 million such lines in 2001; by mid-2011, the number had declined by over 40%, to 112 million. However, I would argue that restricting the term "phone system" to circuit-switched landlines is an overly narrow interpretation that doesn't match my experience of how most consumers think. Telecom geeks like ourselves may understand whether our calls are circuit-switched or packet-switched, but in my experience the average consumer doesn't know the difference -- or care. It's a testable hypothesis, but in my observation, a consumer thinks he's using the phone system whenever he dials the customary 10 digits -- whether his calls travel over wires or radio spectrum, TDM or IP. Even deconstructing the more common geek-speak

term for the phone system – the Public Switched Telephone Network, or PSTN – leads us back to use of a system with three key attributes: it is public (meaning, anyone can use it), it is switched (meaning, anyone can call anyone else who is on it, based on a common addressing system, known to those of us in this room as E.164 numbering), and, finally, it is accessed via telephones (whether fixed or mobile). Nothing about the PSTN terminology restricts the phone system to circuit-switched landlines – notwithstanding the fact that the term developed during a period in history when that was the only technology available to consumers.

That period of history is now clearly over, and the phone system – broadly defined – is thriving. By the middle of 2011, the FCC counted nearly 34 million interconnected VoIP subscriptions in the U.S., a 55% increase since the agency's first count of iVoIP subscriptions in 2008. By June 2011, 31.6% of American homes had cut the cord and gone wireless-only, and our data showed over 290 million wireless subscribers nationwide. Furthermore, CTIA reported that in 2011, U.S. mobile phone users sent over 2.3 trillion text messages and spent a similar number of minutes making phone calls. So while the phone system is certainly changing in form, it is hardly disappearing.

That is why I think of what is happening today as a transition, not the imminent arrival of an endpoint. The phone system is not ending in the way that analog over-the-air TV broadcasting did, with the federal government shutting off access, on a date certain, to the underlying spectrum. Rather, I find it instructive to look at a different previous transition to get some sense of how this one might play out. Since so many of you are academics, I feel compelled to give you a little quiz. Does anyone know the year that the first telegram was sent? It was 1844 when Samuel Morse sent the first telegram. He sent it from Washington, DC to Baltimore, Maryland, and it read: "What Hath God Wrought." Many of us tend to think of communications technologies as happening in overlapping waves, with only a small amount of overlap between the generations: first there was the telegraph, then the landline phone, then cell phones and the Internet. But

do any of you know – or want to guess –when Western Union sent the last commercial telegram? In fact, it was not until 2006, 162 years after the first telegram was sent, and long after telegrams had fallen out of common use. If the phone system follows the same long-tailed pattern, the last phone call won't be made until 2038, 162 years after Bell's famous summons to Watson in 1876. About the only thing we can be sure of at this point, however, is that the last phone call made will almost certainly interrupt us during dinner.

What is driving today's transitions in how we talk to each other over distance? Competition and innovation in the industry, and consumer enthusiasm for the myriad new services that have arisen as a result. But that's not to say that government hasn't had an important role. The whole transition to mobile services wouldn't have been possible if the FCC hadn't made the spectrum available for consumer uses, starting a couple of decades ago. To this day we're continuing to work tirelessly to make more spectrum available for voice and broadband services. In particular, staff at the FCC are now hard at work implementing the voluntary incentive auctions that Congress authorized in February's Middle Class Tax Relief and Job Creation Act.

Government also has a key role to play in protecting consumers, promoting competition and investment, and maintaining the safety of the American public as the transition unfolds. In a series of rulemakings and other proceedings since 2005, the Commission has extended many of the consumer protections of the historic phone system to newer interconnected VoIP offerings, ensuring that consumers are not unpleasantly surprised by phone service that doesn't meet their long-established expectations. For example, in 2005 we ensured that consumers using interconnected VoIP providers would be able to use E911. In 2006, we addressed the sustainability of universal service by bringing interconnected VoIP providers into the system as contributors. In 2007 and 2008, we extended protections for interconnected VoIP users in the areas of customer privacy, relay services for the deaf and hard-of-hearing, and phone number portability.

In 2010, Congress passed the Twenty-First Century Communications and Video Accessibility Act, which required even non-interconnected VoIP providers to make their services accessible to people with disabilities and to contribute to the fund that supports relay services; last year, the Commission released orders implementing both requirements. Most recently, in February the Commission extended its outage reporting rules to interconnected VoIP, so that it can monitor how well providers are meeting their statutory obligation to provide 911 and E911 service to consumers. Moreover, when hurricanes, blizzards, earthquakes and other natural disasters strike, we can be more confident that we're getting an accurate picture of the scope and location of outages.

Government also plays an important role in fostering the transition by updating its rules, so that they do not inadvertently deter adoption of new technologies that provide efficiencies for industry and innovations for consumers. That principle was fundamental to the comprehensive overhaul of the universal service and intercarrier compensation systems that the Commission adopted last October. Intercarrier compensation refers to the somewhat byzantine system of payments that evolved in the wake of the Bell system divestiture and through which carriers pay each other – on a per-minute basis – for the origination, transport and termination of phone calls. Three aspects of this reform were squarely aimed at facilitating the transition to IP networks. First, the reform phases down many per-minute charges and replaces them with a predictable, though still declining, access recovery universal service fund, so that local exchange carriers will become less dependent over time on the minutes of circuit-switched phone calls that are rapidly disappearing. Second, prior to the Order, the intercarrier compensation obligations that pertained to VoIP traffic were the subject of much dispute. To minimize investment uncertainty, the reform adopted a clear prospective framework for intercarrier compensation for VoIP traffic. Finally, the Order made clear the Commission's expectation that "carriers will negotiate in good faith in response to requests for IP-to-IP interconnection for the exchange of voice traffic" -- arrangements that many have argued

will be critical to protecting and promoting competition as circuit-switching equipment is retired and replaced with VoIP technology.

Over the last year, we've heard from many parties about the importance of effective competition policy with regard to burgeoning IP-to-IP interconnection issues. An interconnected phone network has been central to our nation's communications policy since before the FCC even existed, going at least as far back as the Kingsbury Commitment. As Milton Mueller explained in his book on universal service, that term, as used by Theodore Vail, originally referred to a fully *interconnected* network – one in which anyone could call anyone else without having to have more than one phone. We can all agree that interconnection is critical in light of the role of network effects – yet, there are conflicting views regarding interconnection requirements in an IP-centric world. This issue highlights the kind of technical, legal, economic and policy questions that we need to consider as we take concepts from the context of a network that was designed and built to provide phone service—the PSTN-- and consider whether and how to transfer them into the context of networks built from new technologies and designed to support many apps, of which voice is only one.

As many of you may know, last year's USF/ICC Transformation Order contained a Further Notice on IP-to-IP interconnection issues. The Further Notice raises fundamental questions about how the industry and regulation move forward. Some of the broad questions that we are thinking about include:

- What is technically possible, and what is technically feasible on an industry-wide scale?
- How do we work out efficient and equitable solutions to difficult issues like the number of points of interconnection, and costs to convert from TDM to IP, in a way that encourages industry to pursue efficient and welfare maximizing outcomes?

- What is the appropriate role and authority for the Commission regarding the interconnection of IP-based networks without an intervening TDM conversion, in particular for the exchange of phone calls?

We are actively evaluating these questions and reviewing the record received to date from industry and other stakeholders. As always, we welcome submissions of pertinent findings from the research community into the record of our proceeding.

In particular, the Commission has tasked the Technical Advisory Council (TAC), comprised of outside technical experts, to provide advice and recommendations regarding the transition. TAC Working Groups will be taking a look at some of the pressing technical issues in this space, including questions such as:

- How is industry dealing with the exchange of traffic between IP and legacy circuit-switched networks, and how will those methods change as the network shifts to an all-IP network?
- How might interconnection requirements and provisioning evolve as consumers adopt new communications technologies, such as HD voice or video?
- Do technological interconnection issues exist at higher protocol levels, e.g., SIP?
- What architectures might evolve to support VoIP interconnection and interconnection of advanced communications services? How would architectures function at different network layers, such as MPLS, IP, or SIP?

If interconnection policy is one important dimension of universal service, then ubiquity, of course, is the other. The near-ubiquitous reach of the landline phone network stands as one of the great American public policy achievements of the 20th century. Achieving ubiquity in the 21st is an enormous challenge for both federal and state policy makers, who have had an historic partnership in achieving universal service. The Commission has embraced this challenge with gusto, adopting 3 unanimous modernization orders since 2010 to comprehensively reform the universal service programs that ensure affordable communications for rural areas, low-income consumers, and schools and libraries.

A pillar of all these reforms has been to recognize the importance of broadband and mobile services, in addition to traditional voice service. Last fall, in reforming the program that supports communications in rural areas, we established a Connect America Fund with the explicit goals of achieving ubiquitous fixed *and* mobile networks that offer both voice *and* broadband services. We envision a transition in which, ultimately, voice service is offered over broadband-capable networks, whether fixed or mobile. To get there, last fall's order adopted a number of policy innovations, including the targeting of universal service support towards areas not already served by unsubsidized competitors, and the use of reverse auctions to award support for mobile service in areas that are otherwise uneconomic to serve. Our first auction, known as Mobility Fund I, is scheduled for September 27.

But federal universal service funding is only one piece of the shared federal-state commitment to a ubiquitous phone system. Two others are state universal service funds and state Carrier of Last Resort, or COLR, obligations. Traditionally, states (not the FCC) have established COLR obligations for incumbent local exchange carriers. These obligations require the incumbent LEC to provide phone service to anyone within the carrier's service area who requests it. Carriers are typically allowed to charge customers for any associated construction costs, and in many cases they receive explicit funding from a state or the federal universal service fund. In addition, COLR providers may receive access to rights of way and are typically certificated to provide service. A carrier of last resort must also generally receive state approval before that carrier may exit the market. As far as we know, all incumbent LECs who remain subject to COLR duties are also designated as Eligible Telecommunications Carriers, or ETCs – a term of art defined by section 214 of the Communications Act that essentially translates to "carriers that have qualified to receive federal universal service support."

State COLR obligations have been fundamental to the accomplishment of universal phone service. In the record that led to the Connect America Fund order, some suggested that the FCC should pre-empt state COLR obligations. We rejected that

suggestion, because we recognized the historic role that states have played in ensuring consumers retain phone service.

Transitioning COLR obligations along with the phone system does raise a number of important questions, and states have been wrestling with those issues. One principle that in our view is *not* up for debate: every American should have access to reliable, affordable phone service. But in a world where phone service is provided by a variety of different companies using an array of diverse technologies, a number of questions arise:

- Who should be subject to COLR duties, and what should those obligations entail?
- What technologies can fulfill COLR functions?
- What is the appropriate role for state and federal governments?
- Who should pay – consumers, providers, or state or federal universal service funds?
- How should competitive concerns about the need for level regulatory playing fields be addressed, given the dramatic changes I highlighted earlier regarding the types of phone service that consumers are now buying?

We've been monitoring how state legislatures have been grappling with this thicket of issues in recent years. For example, earlier this year, Indiana passed legislation that allows a provider of last resort to be relieved of its obligations as long as there are at least two telecommunications providers that are *eligible* to become ETCs and are offering voice service through any technology or medium. In Alabama, legislation was signed by the Governor last month that expands the definition of local telephone service to include any technology, and relieves incumbent LECs from obligations to provide basic telephone service unless they choose to retain that obligation and file notice with the Public Service Commission. And, a Wisconsin bill passed last year allows ILECs to meet COLR obligations through any technology (for example, wireless) or any affiliate, and relieves ILECs of COLR obligations if the Wisconsin Commission finds it in the public interest or if it finds that effective competition exists for voice service.

In thinking about how these state laws will play out, it's worth reiterating what we believe is a common goal – ensuring that everyone continues to have access to voice service. Recent state laws represent federalism in action, with the states serving as test-beds for different ways to update COLR obligations consistent with a transitioning phone system and the preservation of universal service. We're watching these state actions closely, and we hope that you are too. We'd be very interested in research-based insights into outcomes and best practices that can be learned from the varying approaches taken by the states.

I mentioned earlier that incumbent LECs with COLR duties are typically also designated as Eligible Telecommunications Carriers, or ETCs, and receive federal universal service funds. Just as states are updating COLR duties to reflect a changing world, the Commission has also sought comment on the duties of an ETC. In section 214(e)(1) of the Act, Congress directed that ETCs shall offer services "*throughout* [their] service area." In a Further Notice accompanying the recent Connect America Fund order, we asked for input on how to interpret the obligation to provide service throughout a funded carrier's service area, and whether service area redefinition or selective forbearance could ever be appropriate, given the more targeted funding mechanisms adopted as part of the Connect America Fund. In considering these questions, we are mindful of the various expressions in section 214 of Congress' ongoing expectation of universal service. For example, in section 214(e)(4), which sets forth provisions for relinquishment of ETC designation, Congress made clear that relinquishment could only be accomplished in such a way that "all customers served by the relinquishing carrier will continue to be served." We must keep this Congressional charge in mind as the phone system continues to evolve, and not lose sight of the basic obligation to ensure that a phone system in transition still provides consumers with ubiquitous and reliable phone service.

As you can see, we have no shortage of hard problems to solve as the phone system transitions to a new world. Helping to foster the transition while continuing to protect consumers and promote competition is a challenge the FCC has embraced. Thank you for giving me the chance to tell you about our efforts today, and I look forward to your questions.