Communications Security, Reliability and Interoperability Council

December, 2014

WORKING GROUP 9

Infrastructure Sharing During Emergencies

Backup Power Subcommittee

Shared Services

Table of Contents

1 Summary 6
2 Introduction and Background 6
2.1 Power Backup Requirements 7
2.2 Types of Backup Power 7
2.3 Batteries 7
2.4 Standby Stationary Generators 7
2.4.1 Portable Generators 8
2.4.2 Fuel Cells 8
2.4.3 Types of Fuel 8
2.5 Research 8
3 Site Selection and Prioritization for Shared Backup Power 9
3.1 Overview 9
3.2 Challenges 9
3.3 Coverage vs Capacity 10
3.3.1 Critical Services 10
3.4 Other Co-Located Sites 11
3.5 Level of Risk 11
3.5.1 Commercial Power Failure Frequency and Duration 11
3.5.2 Area Level Risk 11
3.6 Recommendations for Site Priority and Selection 11
3.7 Contact Matrix 12
4 Regulatory Practices for Backup power Sharing 12
4.1 Overview 12
4.2 Federal, State, and Local Regulations 12
4.3 Generators 13
4.3.1 Diesel Generator Regulations 13
4.3.2 Propane Generator Regulations 17
4.3.3 Natural Gas Generator Regulations 17
4.4 Fuel Cells 18
4.4.1 Hydrogen Fuel Cell Regulations 18
4.4.2 Methanol Fuel cell Regulations 18

4.5 Recommendations for Regulatory Practices for Backup Power Sharing 18
5 Technical Requirements for Backup Power Sharing 19
5.1 Scope 19
5.2 Overview 19
20
5.3 Typical Cell Site Configuration 20
21
5.4 Stationary Shared Standby Power Systems 22
5.4.1 AC vs DC Power in a Shared Generator Scenario 22
5.4.2 Stationary Shared Standby AC Design Options 23
5.5 Portable Shared Standby Power Systems 25
5.5.1 Proposed Recommendations 25
5.5.2 Portable Generator Plug 30
5.6 Generator Sizing 30
5.6.1 General Considerations 30
5.6.2 Disadvantages to Oversizing a Generator 31
5.6.3 Fuel Tank Sizing 32
5.6.4 Managing Carrier Load Growth 32
5.7 Site Criteria 32
5.7.1 Examples of Site Conditions That May Dictate Standby Generator Design 32
5.7.2 Fuel Alternatives 34
5.8 Maintenance 35
5.8.1 Managing Carrier Maintenance and AC Electrical Work 36
6 Portable Generators and Fuel Sharing 36
6.1 Scope 36
6.2 Overview 37
6.3 Approach 37
6.4 Shared Resources 38
6.4.1 Sharing of Refueling resources 38
6.4.2 Staging Facilities 38
6.4.3 Bulk Fuel Resources 39
6.4.4 Wireless Mutual Assistance Networks 40
6.4.5 Emergency Power Facility Assessment Tool (EPFAT) 40

6.5 Recommendations for Sharing Resources 41
7 Additional Considerations 42
8 Summary 43
Appendix A- Market Level Disaster and Commercial Reliability Power Analysis 44
Appendix A- Market Level Disaster and Commercial Reliability Power Analysis, Cont'd 45
Appendix A- Market Level Disaster and Commercial Reliability Power Analysis, Cont'd 46
Appendix B- Contact Matrix 46
Appendix C- Staging Yard Contact Matrix 47
Appendix C- Staging Yard Contact Matrix, Cont'd 48
Appendix C- Staging Yard Contact Matrix, Cont'd 49
Appendix C- Staging Yard Contact Matrix, Cont'd 50
Appendix C- Staging Yard Contact Matrix, Cont'd 51
Appendix C- Staging Yard Contact Matrix, Cont'd 52
Appendix C- Staging Yard Contact Matrix, Cont'd 53
Appendix C- Staging Yard Contact Matrix, Cont'd 54
Appendix C- Staging Yard Contact Matrix, Cont'd 55
Appendix C- Staging Yard Contact Matrix, Cont'd 56
Appendix C- Staging Yard Contact Matrix, Cont'd 57
Appendix D – Fuel Supplier Contact Matrix 57
Appendix E- Generator Rental Companies 58

Focus Areas

Leaders and Participant Listing

Focus Area/ Leader	Company Name	Participants	Company Name
Site Selection and Prioritization for Shared Backup Power			
Richard Zinno	**Sprint**		
		Jake Jacobson	**American Tower**
		Per Nygren	**American Tower**
		Steve Martin	**AT&T**
		Cliff Abbio	**Crown Castle**
		Pat O'Donnell	**SBA Site**
		Jay Naillon	**T-Mobile**
		Eric Woody	**Union Wireless**
Regulatory Practices for Backup Power Sharing			
Anil Trehan	**CommScope**		
		Brian Josef	**CTIA**
		Geoffrey Why	**State of Massachusetts**
		Michael Scott	**State of Massachusetts**
		Lois Burns	**State of Pennsylvania**
		Jim Feeney	**Verizon Wireless**
		Chris Oberg	**Verizon Wireless**
Technical Requirements for Backup Power Sharing			
Steve Martin	**AT&T**		
		Dick Scott	**Battery Corp**
		Tom Cooleen	**Battery Corp**
		Kyle Pynn	**Burns & McDonnell**
		Cliff Abbio	**Crown Castle**
		Gayla Haag	**Crown Castle**
		John Kim	**Enersys**
		Ernie Gallo	**Ericsson**
		Jim Feeney	**Verizon**
Portable Generators and Fuel Cell Sharing			
Cindy Perez	**Cat5 Resources**		
		Kathy Catalano	**Cat5 Resources**
		Ingrid Caples	**HHS**
		Bob Oenning	**Earthlink**
		John Kim	**Enersys**
		Steve Tibbs	**Foster Fuels**
		Todd Dufur	**Generac**

1 SUMMARY

The communications sector provides the basis for information exchange, including voice, data, video, and Internet connectivity, for all other sectors. As such, it is incumbent upon the industry to ensure that our Nation maintains a communications network that offers reliable and resilient service in the face of significant equipment or system failure, which is sufficiently survivable to provide some continuity of service during major emergencies.

The electricity transmission system in the United States is one of the greatest engineering achievements of the 20th century. Unfortunately, there is growing evidence that the U.S. transmission system is under stress. Growth in electricity demand and new generation, lack of investment in new transmission facilities, and an incomplete transition to fully efficient and competitive wholesale markets have led to the emergence of transmission bottlenecks. These bottlenecks increase the risks of blackouts[i].

Cellular Base Stations (aka Cell Sites) are dependent on commercial power to operate, and when power fails, the Cell Site will fail without a reliable source of uninterrupted backup power.

The CSRIC WG9 Backup Power Sub-team has come together to identify the approaches and recommendations to share backup power resources to enhance the reliability of the Nation's critical communication infrastructure. The following recommendations will help strengthen the reliability of commercial communications systems during major emergencies.

2 INTRODUCTION AND BACKGROUND

Disaster preparedness, recovery, and restoration efforts have been a major part of all wireless providers' Business Continuity Plans for decades. Not only is communications network continuity important for consumers during natural disasters, but many first responders such as firefighters, law enforcement, paramedics, utility workers, and relief workers often look to commercial wireless networks as a critical supplement to their public safety and private land, mobile, communications systems during these times.

The CSRIC Working Group 9 Backup Power Sub-team was divided into four focus groups to drill down on separate areas, challenges, and recommendations to increase the resiliency and reliability of the telecommunications infrastructure.

These focus areas are: 1) Site Priority and Selection, 2) Regulatory practices to enable shared backup power deployment, 3) Technical Requirements for Shared Backup Power Deployment, and 4) Sharing of Portable Generators and Fuel resources.

It should also be noted that the National Institute of Standards and Technology (NIST) is currently engaged in the research and development of a disaster resilience framework document that outlines the shortcomings that must be addressed in order to heighten community resiliency. In chapter 8 of

that document, NIST outlines recommendations relating to telecommunications infrastructure and backup power.

Working Group 9 recommends that the FCC share the following output and recommendations, including research, findings, and considerations, outlined throughout this document with NIST and other working groups engaged in similar work.

2.1 Power Backup Requirements

The power requirements based on kilowatts (kW) for telecommunications sites and supporting facilities can be categorized as follows:

- Single Operator Site (outdoor cabinets) – 5kW to 10kW
- Single Operator Site (shelter site) – 30kW to 50kW
- Multiple Operator Site – 5kW to 50kW per operator

2.2 Types of Backup Power

A variety of backup power devices are used on telecommunications sites. The type and size of systems depend upon the facility power demand, the designed backup time, and the critical nature of the site. Each operator has their own specific requirements and is best suited to determine their potential liabilities. The operator will be responsible for ensuring that the configured backup system(s) meets their specific policies and regulations. These requirements may include environmental systems related to equipment operating parameters.

2.3 Batteries

There are several types of batteries available for power backup. Examples of common batteries used at sites include ventilated lead acid (VLA), valve regulated lead acid (VRLA) or non-spill, and Nickel Cadmium (Ni-Cd). Batteries provide a direct current (DC) power source for the site equipment and are generally sized for two to eight hours of back-up. In some instances, the batteries are sized for 15 minutes of back up only to provide enough run time for a standby generator to restore power.

Battery backup generally will not provide power to heating, ventilation and air conditioning (HVAC) systems. Without proper cooling, sites can overheat before the battery has depleted. Therefore, a means to provide a temporary alternating current (AC) power source, whether a permanent fixture or portable fixture, should be available.

2.4 Standby Stationary Generators

Standby Generators are utilized for long duration outages and are sized to support the entire facility for the site equipment, battery recharge, and HVAC operation. Standby generators are deployed in addition to battery backup systems.

There are multiple generator types and fuel sources, as outlined below. All need to be properly sized for the site requirements which include site operation as well as power inrush due to equipment start up. Proper sizing is also critical when deploying for multiple operators.

Run time duration for fuel source sizing should be based on peak load. See section 5.6.3 in this document for recommended fuel tank sizing guidelines. This should be adjusted based on site access, remoteness of site, and available resources. For example, sites with generators that are located on remote mountains should have fuel to support longer durations, whereas sites located close to fueling centers can have less fuel.

2.4.1 *Portable Generators*

When stationary generators are not available, portable generators can be deployed to sites. Operators typically have a means for temporary connection through the use of Cam-Lok™ connectors, generator plugs, or other quick connection devices. When planning for use of portable generators as a shared source, pre-planning for deployment must occur before actual emergencies. Considerations must be made for sizing, management, fueling, installation, and security. Portable generators are highly prone to theft during an emergency situation. Likewise, consideration should be given to securing the fuel for both fixed and portable generators. For some sites with considerable battery backup, portable generators may be moved from site-to-site to recharge the batteries.

2.4.2 *Fuel Cells*

Fuel cells convert the chemical energy in a fuel directly to electrical energy. They can be more efficient and reliable than generators and have no, or a very small emissions footprint. Like generators, fuel cells are used for providing extended duration backup.

2.4.3 *Types of Fuel*

The following is a list of backup power sources and their fuel types:

Standby Internal Combustion Generator:

- Diesel
- Propane
- Natural Gas

Fuel Cell:

- Hydrogen
- Methanol
- Natural Gas

2.5 Research

In an effort to better understand present generator deployments and distributions the working group gathered a random sample of site and generator information from 600 random sites across the Eastern U.S. The sample shows that currently, there is an average of 2.5 carriers collocated at each site. Based upon this sampling there is a possibility that two or more carriers could potentially come together at these shared locations to create an immediate efficiency regarding shared resources.

Total Sites	Total Generators	Total Carriers
600	894	1558
Avg. Carriers Per Site	**Avg. Generators Per Site**	

2.5	1.5

3 Site Selection and Prioritization for Shared Backup Power

3.1 Overview

When all carriers at multi-tenant sites can tie into a landlord provisioned or shared third party fixed backup power generator, it becomes an effective and environmentally friendly way to back up the telecommunications infrastructure. Rather than each carrier providing their own extended backup power source, a multi-tenant unit can provide a fixed generation asset that carriers could potentially access if at a reasonable costs. And, instead of each carrier needing its own space–space issues becoming increasingly more difficult for each sequentially arriving carrier–a multi-tenant generator model provides efficiencies. Additionally, a single generator, rather than multiple generators, lowers capital and operating expenditures and avoids escalating environmental, noise, space, and other similar issues. Regarding the supply chain, there would be fewer organizations vying for an often constrained diesel fuel supply while providing for a reduced risk of diesel spills.

When multiple requirements for backup power exist at a single cell site, options for a shared source could be explored. A single multi-tenant generator asset can be owned, operated, and maintained by the Tower Aggregators, Network Operators, or another Third Party Provider.

3.2 Challenges

Wireless networks are power hardened to different degrees from a backup power perspective based on the carrier's needs (some carriers already have standby emergency generators at a majority of their sites). Rooftop sites will always be very difficult to power harden due to the logistics of generator placement. Even if the carrier is attempting to run a cable to a ground level generator, in urban environments there is often no ground level space that the landlord can or will make available. Additionally, power hardening a rooftop site after the fact is much more difficult because of the need to secure cranes, permits, as well as weight, space, and vibration restrictions at these locations. The only truly feasible method to power harden a rooftop site is to tie into the landlord generator or install a natural gas generator which requires the building owner to run natural gas to the roof. Some

building owners do not like the idea of a spark ignited generator on their roof. Building owners may be more amenable to generator installation when the unit supports carrier relevant facility critical functions such as security systems.

Additionally, at tower sites, installing a fixed backup power source after a tower is commissioned is much more difficult than installing it as part of the initial build. This is primarily because the space set aside for a fixed generator is limited in many compounds where there are multiple carriers present.

3.3 COVERAGE VS CAPACITY

For a single carrier, basic wireless service coverage can typically be restored more quickly and at a less prohibitive cost than fully restoring previously existing network capacity. For example, high sites that cover a larger area would be restored first when possible. This would bring coverage to a large area, but might compromise the reliability of service inside buildings because the average signal strength at the location will be lower. There might be many more dropped calls when many cells are out of service, because the amount of cell "overlap" might not be sufficient for reliable handoffs. In general, not all carriers will necessarily have the same needs from each site, nor do carriers necessarily provide the same coverage footprint with the same sites. This is due to the differences in technology, numbers of antennas and antenna height on the tower, frequency band, capacity, and individual carrier deployment priorities.

Providing a basic coverage area may be possible with a fraction of the cell sites within an area. Those higher coverage sites selected to be protected could, by themselves efficiently provide a basic coverage footprint to be used by other critical services. This is in line with existing priority communications program objectives that would allow critical users access to a congested network via Wireless Priority Service (WPS) and/or Government Emergency Telecommunications System (GETS).

As wireless networks transition to all Internet Protocol (IP) based infrastructure, telecom providers will have greater capability to manage traffic flow, provided they are not prohibited from doing so. After a disaster, if networks are damaged and heavily loaded, voice traffic could be prioritized above data services. Low priority web traffic demands could have their access to the network limited, while voice and higher priority data traffic is accommodated[1].

3.3.1 *CRITICAL SERVICES*

While coverage sites are a good starting point to identify and prioritize opportunities for shared backup power, each carrier will likely have a selection of sites that are considered their highest priority. Some examples of these are sites that: generate a significant amount of traffic and/or revenue, cover first responder/public safety locations such as Emergency Operation Centers, provide service to major commercial airports/ports, important customers, and other critical infrastructures (healthcare, energy, transportation systems, banking & finance, etc.).

[1] The introduction of Self Organizing Networks and LTE Direct capabilities will impact carrier decisions on network restoration however as future implementations they are not considered in this document.

3.4 Other Co-Located Sites

Those sites that are not considered to be a 'Critical Server' or a 'Coverage Site' still add value and may be good candidates for sharing backup power. With the deployment of Long Term Evolution (LTE), backhaul requirements from cell sites have increased by orders of magnitude. Increased bandwidth requirements have driven a resurgence of short-haul microwave networks. Microwave network topology can result in points where the traffic from dozens of sites can converge to a single fiber access node. While protected rings are often deployed for redundancy, it is still good engineering practice to harden all fiber access nodes.

3.5 Level of Risk

3.5.1 *Commercial Power Failure Frequency and Duration*

Risk is a function of probability and impact. Just over half of all commercial power failure outage events are less than one hour in duration. This can be a helpful first step in developing a risk management strategy. While one may conclude that it's an acceptable risk to ignore the longer duration outages, it would be a mistake to do so. More frequent short-duration events result in a comparatively *small threat* to network operation/reliability. However, **less** frequent long-duration events result in a disproportionately larger threat. In other words, while the frequency of events lasting *less* than one hour is much higher, the events lasting *longer* than 8 hours can account for a much greater impact in terms of service outages if extended backup power is not provided. Additionally, shorter duration outages can generally be managed by site battery backup.

3.5.2 *Area Level Risk*

Power hardening provides a varying degree of greater reliability in different parts of the country. With every investment in improved network reliability, there is an increase in capital cost, and generally an increase in perpetual operating expense as well. Providers manage these costs along with other costs such as the rising costs of deploying faster networks. Hence, the decision to undertake any investment is a function of weighing potential consumer benefits relative to the costs. Even though a shared backup power resource can make sense, carriers may elect to not seek a backup power solution in every part of the country.

Consideration must also be given by market to the possibility of that market's most likely causes of long-term power outages also causing long-term backhaul outages. If backhaul is likely to be also lost, the value of power hardening is greatly reduced.

Appendix A outlines an analysis of different risk factors to assist in prioritizing geographies for Backup Power Hardening.

3.6 Recommendations for Site Priority and Selection

The following recommendations regarding site priority and selection are not meant to be classified as best practices, but rather, considerations that the FCC should share with NIST and other working groups engaged in similar work.

- In High Risk Markets, carriers could consider jointly sharing a generator.

- Carriers could seek opportunities to tie into a landlord generator on rooftop sites if possible.
- Carriers could identify "Coverage Sites" and "Critical Server" sites as a starting point for those sites they wish to have backup power. A prioritization of several broad categories could be a useful starting point.
- Property Managers, aggregating tower resources, or carriers could implement a shared resource deployment model that supports backup generator(s) for existing carriers as well as new carriers utilizing a tower.
- Carriers and Tower Companies could discuss options under a non-disclosure agreement to discuss shared generator opportunities for locations where they are collocated in the same compound. Possible options to consider are the option to join together to provide a multi-tenant generator tie-in or seek a third party to provide the shared generator for a monthly fee.
- Carriers could prioritize backup power hardening in markets/areas with the most risk of natural disasters that also have the least reliable/resilient electrical power grid ("High Risk Markets").
- The reasonableness of the monthly charge to tie into a landlord owned generator should relate to the costs of deployment, as this is a capital intensive venture with high costs to operate.
- Microwave network topology could result in points where the traffic from dozens of sites can converge to a single fiber access node. In such cases, carriers could consider investigating opportunities to harden these locations.
- Jurisdictions could consider aiding operators in routing natural gas connections to urban cell sites. Assistance may be found in having fire department or city subject matter experts provide advice on the relative safety of gas lines running to carrier generators.

3.7 Contact Matrix

See Appendix B for contacts at Tower Companies and Telecom Providers.

4 Regulatory Practices for Backup power Sharing

4.1 Overview

The purpose of focusing on the regulatory practices surrounding backup power sharing was to establish a list a of existing backup power equipment regulations in order to help expedite approval from state and federal regulatory agencies, zoning boards, building codes, fire departments, etc. for deployment of such equipment during an emergency situation. While some rules for backup power deployments are necessary, Working Group 9 recommends the FCC work with local, state, and federal regulators to adjust policies to ease the burden on carriers and Tower Companies in deploying permanent and or portable backup power resources that would provide backup power during emergencies.

4.2 Federal, State, and Local Regulations

Federal Regulations

Federal, National Electric Code (NEC) and International Building Code (IBC) regulations for standby equipment are specified in various National Fire Protection Agency (NFPA) codes. The

transportation of fuels is regulated by the US Department of Transportation (DOT). Emission regulations governing emergency standby diesel generators primarily rest with the US Environmental Protection Agency (EPA).

The NFPA requires that Optional Standby Power Systems be installed, tested and maintained in accordance with NFPA 110, *Standard for Emergency and Standby Power Systems.*

Fuel Storage tanks are covered under NFPA-30, *Flammable and Combustible Liquids Code.* Enforceable under Occupational Safety and Health Act (OSHA) and many state and local regulations, NFPA 30 provides safeguards to reduce the hazards associated with the storage, handling, and use of flammable and combustible liquids.

State and Local Regulations

State, regional, and local jurisdictions can dictate their own requirements which govern pollutant limits, runtime usage, and reporting requirements, including the California Air Resources Board and the South Coast Air Quality Management District. These regulations vary from state-to-state and by local jurisdictions. An exhaustive list of such regulations will be substantial and is therefore not provided here. The following website will help guide backup resource owners and operators to determine the state and local regulations governing the deployment and sharing of backup resources during emergency situations (select ADOPTIONS tab):
http://www.iccsafe.org/cs/PMG/Pages/default.aspx

4.3 GENERATORS

4.3.1 *DIESEL GENERATOR REGULATIONS*

Diesel is currently the most popular fuel source for standby generators. Diesel is a widely available fuel with a well-established distribution network. However, diesel does require great care in its handling due to environmental impact from spills as well as having the largest emissions considerations.

Diesel is classified as Class 2 fuel. The EPA issued its final exhaust emission regulations in 2010 for emergency Standby Diesel Generator Sets, which took effect on January 1, 2011.

The EPA began to enforce limitations on exhaust emissions for off-highway diesel engines in 1996, and in 2006, for stationary diesel generator sets. These 'progressive' regulations (called Tier levels) became more stringent in the years since, and have had a major effect in substantially lowering the levels of nitrogen oxide (NOx), carbon monoxide (CO), particulate matter (PM) and non-methane hydrocarbons (NMHC).

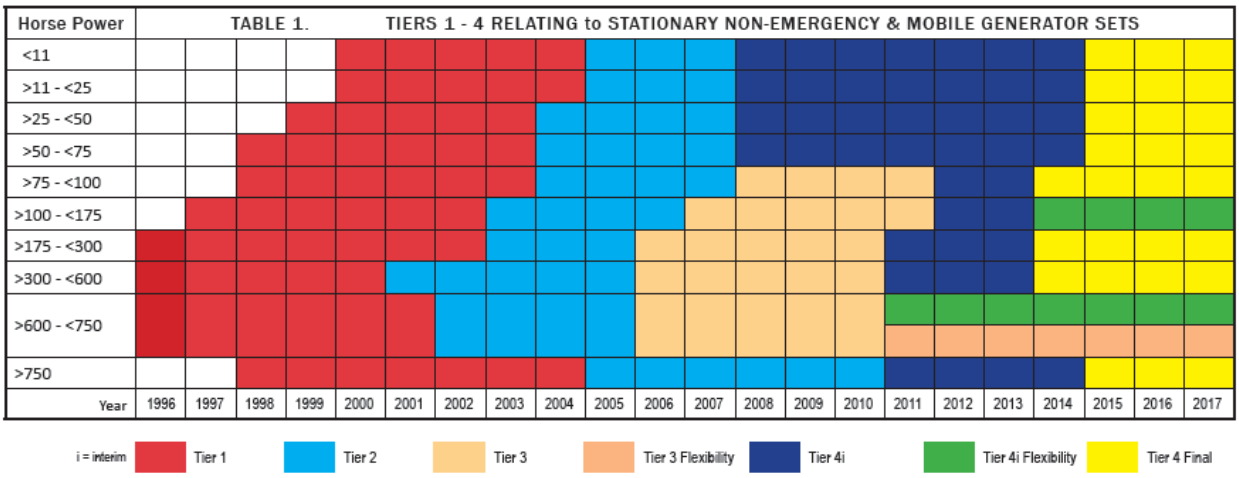

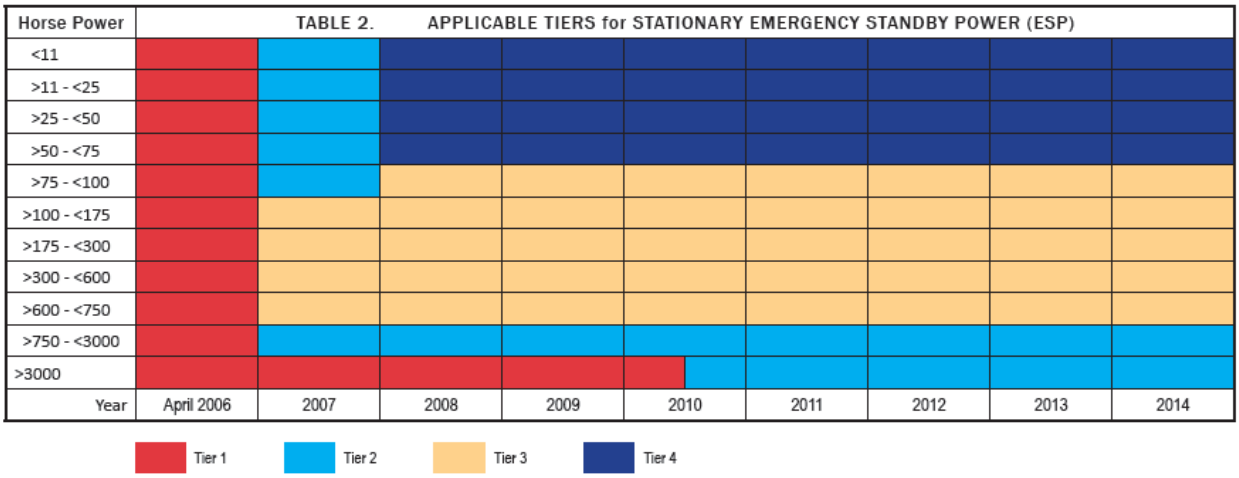

By the time Tier 4 Final regulations were introduced in 2013 and 2014, the NOx and PM levels from diesel exhaust will have been reduced by 99%. These Tier levels were introduced and 'staggered' over this timeframe, dependent upon the generator diesel engine horsepower (or metric mechanical kW equivalent) and not the kW output per the generator nameplate. Diesel engine manufacturers were able to achieve compliance by implementing in-engine or internal design changes (e.g. combustion chamber, fuel injection pressure, valve timing, cooled exhaust gas recirculation, and engine controls) to meet the Tier 2 and Tier 3 regulations and this has resulted in an emission reduction improvement of more than 85%.

Alternative Standards

The EPA has found that the low exhaust emission rates with Tier 2 and Tier 3 engines will be acceptable for Emergency Standby Power (ESP) installations and thus they are exempt from the need to use Tier 4 Interim and Tier 4 Final diesel engines. However, the smaller horsepower (HP) sizes (below 50HP) are already required to comply with Tier 4 Interim (since 2008). In addition, ESPs have historically only been shown to run for less than 200 hours per year, and thus, have a very small impact on the local air quality. There is no limit to the duration of run-time hours in true emergency occasions such as utility outages or equipment malfunctions. This means that such generators will be

in compliance with EPA through 2015 and beyond where they are used strictly for emergency duties. Currently, they will be allowed to run for up to 100 hours per year for testing and maintenance purposes, including discretionary and not-for-profit non-emergency usage.

Definition of "Optional Standby Systems"

The 2014 Edition of the National Electric Code (NEC) defines "Emergency Systems" in Article 700, "Legally Required Standby Systems" in Article 701, and "Optional Standby Systems" in Article 702. All cell site generators are classified as optional standby systems and are governed as such by NEC Article 702 and NFPA 110. Use of the NEC defined term "emergency" creates unnecessary confusion with Authorities Having Jurisdiction (AHJ) and should be avoided.

Optional standby systems are generator installations that only operate (i.e. limited operation) upon the loss of a normal power source such as the utility or mains grid. In this instance, when the normal power source is lost, the generator starts to supply the electrical loads. Once the normal power source is reestablished and the generator shuts down, these electrical loads are once again supplied from the normal source. All operation of the generator must be recorded by the user and referenced to a non-resettable hour recorder fitted to the generator. Any new diesel engines that are built after the effected introduction date of the Tier 4 regulation must also be fitted with a permanent label stating that they are only for emergency use.

Exemptions and Challenges

State and local authorities may dictate stricter regulated emissions limits. The following are examples of these exemptions:

- The State of California will not exempt emergency diesel generators with these applicable EPA rules from 2011 and will enforce even stricter regulations for non-emergency stationary engines. This will result in the large majority of generator sets sold into California to use exhaust after-treatment devices, beginning in 2011.
- Certain regions and locations in the US may also enforce more stringent stationary emission regulations than the EPA diesel engine Tier levels. These include non-attainment areas - normally large population centers - where high local emissions, local weather conditions, or ozone concentrations exceed the EPA air quality standard recommendations. For example, we can refer to such as areas of Southern California, areas of many New England states, Atlanta, GA, Puerto Rico, and Houston, TX. This means that a stationary diesel-fueled emergency generator set – even if certified to the appropriate EPA Tier level, may not meet the local requirements.

As the EPA lowers National Ambient Air Quality Standards (NAAQS) levels across the nation, more areas are likely to fall into non-attainment status and therefore further engine emission regulations are likely to be implemented. Although the newer EPA National Emission Standards for Hazardous Air Pollutants (NESHAP) rules allow for unlimited running of generators during emergencies, very few states have adopted this approach and still limit the use of generators during emergency situations.

Additional Notes

EPA Diesel Off Road Emissions Compliance

- Technology of engines must be compliant based on when the unit was purchased. If it was purchased in 2007, the 2007 rulings apply to that unit.
- Spill Containment – Liquid containment based on the amount of fuel in the unit. Must have measures in place to ensure there are no spills when the unit is deployed.
- Noise regulations are set locally.

4.3.1.1 Fuel Transportation Regulations

The US Department of Transportation (USDOT) issues most of the "Transportation" regulations in Title 49 – Transportation, Code of Federal Regulations (49 CFR). The Hazardous Materials Regulations (HMR) are in the volume containing Parts 100-185 and govern the transportation of hazardous materials in all modes of transportation – air, highway, rail, and water.

Transport of No. 2 Diesel Fuel

- A Department of Transportation (DOT) 406 tank is not required but is suitable for the transport of Diesel Fuel under the United Nations Hazardous Material Code 1202 and North American Hazardous Material Code 1993 (UN1202/NA1993) on public roadways per federal transportation requirements.
- A DOT 406 tank is also suitable for the transport of No. 2 Diesel Fuel (UN1202/NA1993), but is not required per Special Provision B1 found in 49 CFR 172.102, p. 325 noted in the Hazardous Materials Table found in 49 CFR §172.101. Special Provision B1 specifies that materials with flash-points above 38°C (100°F) and lower than 93°C (200°F) are subject to 49 CFR §173.241(Bulk packaging for certain low hazard liquid and solid materials).
- 49 CFR §173.241 specifies that non-DOT specification cargo tank motor vehicles are suitable for the transport of such fuels. No. 2 Diesel Fuel (UN1202/NA1993) has a flash-point greater than 58°C (125°F).

Additional Information Regarding Fuel Transport:

- A double-wall tank is not required per federal transportation requirements for the transport of diesel or gasoline in bulk containers, but may be required by local or other jurisdictional regulations.
- Underwriters Laboratories (UL) standards 142 and 2085 do not apply to mobile fuel storage containers, only to stationary above ground storage tanks as specified in the scope of the UL 142 standard, part 1.7.

The following quality standards are typically required:

- UN 31A Group Y Intermediate Bulk Container (IBC): Such IBCs are suitable for the transport of Gasoline (UN1203) on public roadways per federal transportation requirements codified at 49 CFR §173.242 sub-part d. Group Y IBCs are authorized to transport UN Packaging Group (PG) II materials, which includes Gasoline (UN1203) and No. 2 Diesel Fuel (UN1202/NA1993). See 49 CFR §178.703(Marking of IBCs).

- UL 142 as an aboveground storage tank. See above.

4.3.2 *Propane Generator Regulations*

NFPA 58, *Liquefied Petroleum (LP) Gas Code*, is the industry benchmark for safe LP Gas storage, handling, transportation, and use. This code mitigates risks and ensures safe installations to prevent failures, leaks, and tampering that could lead to fires and explosions.

4.3.2.1 Transportation of Propane

General requirements for the transportation of LP gas in cylinders are found in 49 CFR § 173.301.

(1) Paragraph (c) requires that, "A container for which prescribed periodic retest has become due must not be charged and shipped until such retest has been properly made."

(2) Paragraph (g) requires that containers charged with flammable gases must have their valves protected by one of the following methods:

(a) By equipping the containers with securely attached metal caps of sufficient strength to protect the valves from injury during transit.

(b) By boxing or crating the containers so as to give proper protection to the valves.

(c) By so constructing the containers that the valve is recessed into the container or otherwise protected so that it will not be subjected to a blow when the container is dropped on a flat surface.

(d) By loading the containers compactly in an upright position and securely bracing in cars or motor vehicles, when loaded by the consignor and to be unloaded by the consignee.

Methods (a), (c), and (d) apply to portable and stationary LP gas cylinders transported by propane marketing companies. Method (b) is used for small non-refillable cylinders.

(3) In addition to these specific requirements, the other regulations regarding container labeling, vehicle placarding, shipping papers, and emergency information covered in other guides in this reference apply as well.

4.3.3 *Natural Gas Generator Regulations*

NFPA 54, National Fuel Gas Code (NFGC) covers the installation and operation of fuel gas piping systems, appliances, equipment, and related accessories, with rules for piping system materials and components, piping system testing and purging, combustion and ventilation air supply, and venting of gas-fired appliances and equipment.

Natural gas generators are almost always deployed at sites that have piped natural gas. The increased availability of natural gas in the US has made natural gas generators more attractive for use at sites. However, it should be noted that in the event of an emergency situation or disaster, the natural gas suppliers may elect to suspend the supply of natural gas if there is a possibility of a gas line break. This was evident during the Super Storm Sandy event of 2012. Some natural gas generators are

capable of utilizing other fuels, which may be transported to the site. Otherwise, such sites should plan to accommodate a portable backup resource for emergency situations.

It should also be noted that on-site power generators are used mostly during power outages created by natural disasters. The preferred method is to provide self-contained on-site power backup equipment with a fuel source, which provides ample run-time and can be continually replenished.

4.4 Fuel Cells

Fuel cells provide a clean and reliable source for power backup. This is a new technology and so far, they have been deployed at thousands of wireless cell sites in the US. Fuel cells provide DC power output and are therefore more suited for outdoor cabinet sites, which require DC power only. In some cases, inverters are used to provide backup for AC powered equipment.

NFPA 853, *Standard for the Installation of Stationary Fuel Cell Power System* applies to the design, construction, and installation of stationary fuel cell power systems. The scope of this document includes the following: (1) A singular prepackaged, self-contained power system unit (2) Any combination of prepackaged, self-contained power system units (3) Power system units comprised of two or more factory-matched modular components intended to be assembled in the field (4) Engineered and field-constructed power systems that employ fuel cells.

4.4.1 *Hydrogen Fuel Cell Regulations*

NFPA 2, *Hydrogen Technologies Code*, provides fundamental safeguards for the generation, installation, storage, piping, use, and handling of hydrogen in compressed gas (GH2) form or cryogenic liquid (LH2) form. This code is derived from NFPA 55 specifically for hydrogen gas.

General requirements for the transportation of hydrogen cylinders are found in 49 CFR § 173.302.

4.4.2 *Methanol Fuel cell Regulations*

Methanol (CAS: 67-56-1, NIOSH: PC-1400000, DOT: 1230, UN-1230, NA-1230) is classified by the International Code Council (ICC) and the NFPA under the Uniform Fire Code (UFC) as an, "IB Flammable Liquid," and by the UN as a, "1993 Class 3 Flammable Liquid." The NFPA and DOT rank flammability as a 3 primary hazard, and toxicity as a 6.1 ranked secondary hazard. Guidelines for handling IB flammable liquids are provided by codes and standards published by ICC, NFPA, and the IFC.

Guidance for safe storage of methanol is provided by ICC, NFPA, and IFC, and is available in:

- NFPA 1, Uniform Fire Code
- NFPA 30, Flammable and Combustible Liquids Code

4.5 Recommendations for Regulatory Practices for Backup Power Sharing

Although the local, state, and federal regulations mentioned in the above sections have proven successful at lowering pollutants, they also serve to potentially inhibit the efficient deployment of

generators and/or other backup power solutions to cell sites and other communications facilities during emergencies.

Our recommendation is for the FCC to work with local, state and federal regulators to explore alternatives to lighten these regulations as they apply to wireless infrastructure in an effort to streamline the deployment of permanent and or temporary backup power resources enabling those facilities to operate during times of emergency.

5 Technical Requirements for Backup Power Sharing

5.1 Scope

Develop a framework for how stationary and portable shared standby power resources can be accomplished from an engineering, installation, and maintenance practice perspective. This section is designed as a job aid to assist tower owners, carriers, and third parties in areas such as engineering design considerations, sizing, and how to evaluate standby power options per site conditions. Generic block diagrams describe the various stationary and portable shared generator configurations.

5.2 Overview

Carriers have deployed a variety of standby power alternatives at cell sites, including a combination of batteries, stationary standby generators, fuel cells, and portable generators. The type and size of systems depend upon the facility power demand, the designed backup time, and the critical nature of the site. Each operator has their own specific requirements and is best suited to determine their risk management strategies. The operator will be responsible for ensuring that the configured backup system(s) meets their specific policies and regulations.

Deploying stationary standby generators or fuel cells for every carrier at every site can be costly and in many cases, such as urban rooftop sites, technically challenging. During a widespread disaster recovery effort, portable generator resources and fuel availability are strained. Sharing standby power resources may provide carriers a method in which to improve resiliency at a reduced cost, or to stretch limited resources. However, it is important to note that all shared standby generator scenarios are inherently less resilient than each carrier having their own stationary standby generator. If a single shared generator fails, the entire site is out of service. If each carrier has its own dedicated generator and it fails, then only that carrier is out of service.

During a disaster, if every carrier deploys a portable generator, it can create logistics problems with parking and fuel delivery access. At the site in Figure #5-1 (below), one carrier owns the site and has a stationary standby generator that serves its facilities. Other carriers lease space at the tower. During this disaster recovery, the tenant carriers each deployed portable generators. The first two portable generators consumed the available space inside the fence, forcing the third carrier to park his portable genset outside. This exposes the portable genset to a greater chance of theft or vandalism. The two portable generators inside the fence block access to the host carrier's fuel tank, restricting the ability to refuel.

If the stationary standby generator has the capacity to serve the total power requirements for the site, then this site is an example of where shared standby power resources can be a win-win for all. The generator owner benefits via revenue from increased lease rates and the ability to access and refuel his standby generator. The tenant carriers benefit by not having to deploy limited portable resources at this site, not having to schedule multiple refuel visits, and by not being the "odd man out" who has to park on the street.

Figure #5-1 – Multiple Portable Genset Deployment – Possible Shared Standby Power Opportunity.

5.3 Typical Cell Site Configuration

To understand the shared stationary and portable standby power options, we need to understand how carriers currently deploy dedicated stationary and portable standby power.

A typical shelter configuration that includes a dedicated stationary standby generator is shown in Figure #5-2 (below). Major power related components include:

- AC electrical infrastructure,
- DC power plant, and
- Standby AC Generator

The AC electrical infrastructure consists of the commercial AC service, automatic transfer switch (ATS), and AC distribution panel board. DC power plant consists of rectifiers, batteries, and DC distribution. The stationary standby generator is typically located outside the shelter, in an enclosure, as shown in Figure #5-3 (below).

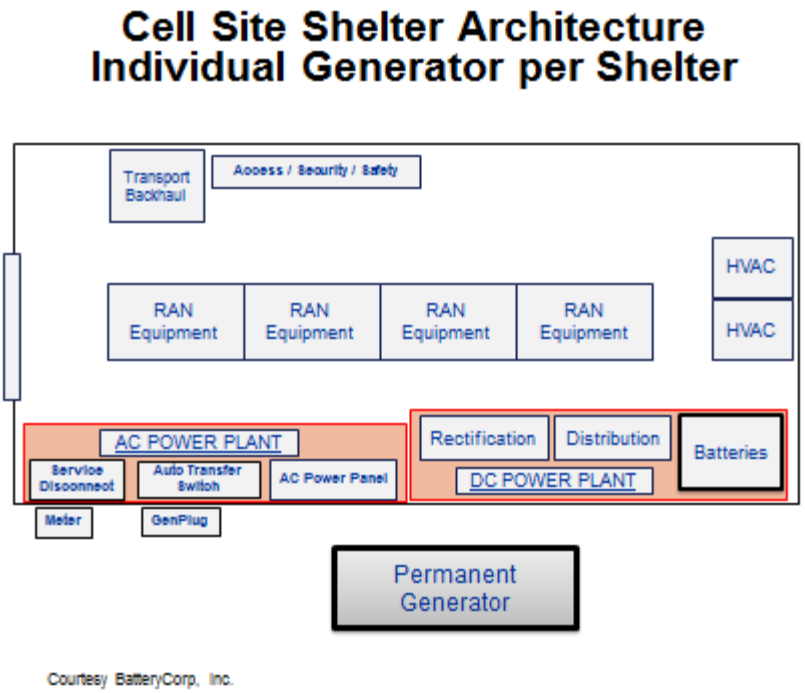

Figure #5-2 – Example Cell Site Configuration – Shelter with a Stationary Standby Generator.

Figure #5-3 – Typical Stationary Standby Generator in an Enclosure

A typical cabinet based configuration that includes a stationary standby generator is shown in figure #5-4 (below). The fundamental difference between shelters that utilize HVAC versus a cabinet based configuration that relies on convection cooling is the equipment is more environmentally hardened in a cabinet and does not require air conditioning. The absence of air conditioning reduces site power requirements, typically by nearly half. More importantly, it eliminates the inrush current from a compressor, which allows for smaller standby generator sizing. Given the predominant shelter design

includes 2N redundant HVAC units, eliminating the inrush current is significant. Generator sizing will be discussed in greater detail in section 5.6.

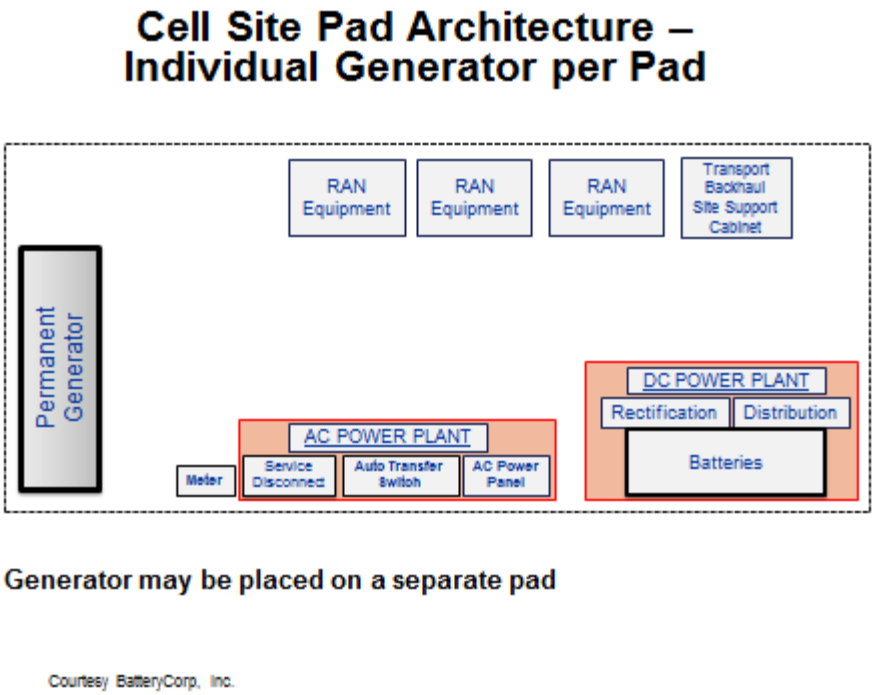

Figure #5-4 – Typical Cell Site – Cabinet on a Pad with a Stationary Standby Generator

5.4 Stationary Shared Standby Power Systems

5.4.1 *AC vs DC Power in a Shared Generator Scenario*

AC standby generators are the logical choice for shared standby power applications. Code regulations and wiring methods for AC distribution to multiple tenants are well defined and understood, while code regulations and wiring methods for DC distribution to multiple tenants are either non-existent or poorly understood. This effectively eliminates DC generators and fuel cells that produce a DC output from shared standby power application consideration. DC generators and fuel cells are viable solutions when dedicated to a single carrier.

While it is true that inverters can be added to convert the DC output of a DC generator or fuel cell to AC, thus overcoming the code regulations and wiring methods concern, the addition of an inverter raises its own concerns:

- Diminished resiliency, as it introduces a single point of failure. N+1 or 2N architectures are required to overcome single point of failure, which increases cost and complexity.
- Diminished energy efficiency. When combined with N+1 or 2N designs, which has an inherently lower utilization, energy efficiency is reduced even more.

- An AC generator is a more logical design than a DC generator plus an inverter.

Finally, DC generators or fuel cells that do not use an inverter require the use of DC powered cooling. While an individual carrier may choose to deploy DC cooling at a site, the odds that every carrier at a site has deployed or is willing to deploy DC cooling, is virtually zero. This document will focus on shared standby AC design options.

5.4.2 *Stationary Shared Standby AC Design Options*

It is recommended that one of the two following designs should be considered when deciding which standby AC system to employ. There are two basic choices in stationary shared AC standby power system design:

- Recommended Design – Shared stationary standby generator equipped with an individual ATS for each tenant, as shown in Figure #5-5 (below). This design is the most favored design among carriers and tower owners at existing shared stationary standby generator sites.
- Alternate Design – Shared stationary standby generator equipped with a single ATS, as shown in Figure #5-6 (below). This alternate design is more logical if the site is new with no existing electrical infrastructure. The ATS connects to a Main Distribution Panel (MDP), with breakers for each tenant. A remote controlled relay to turn off power to each tenant may be required, particularly to sequence adding each tenant to the genset load, to limit inrush current.

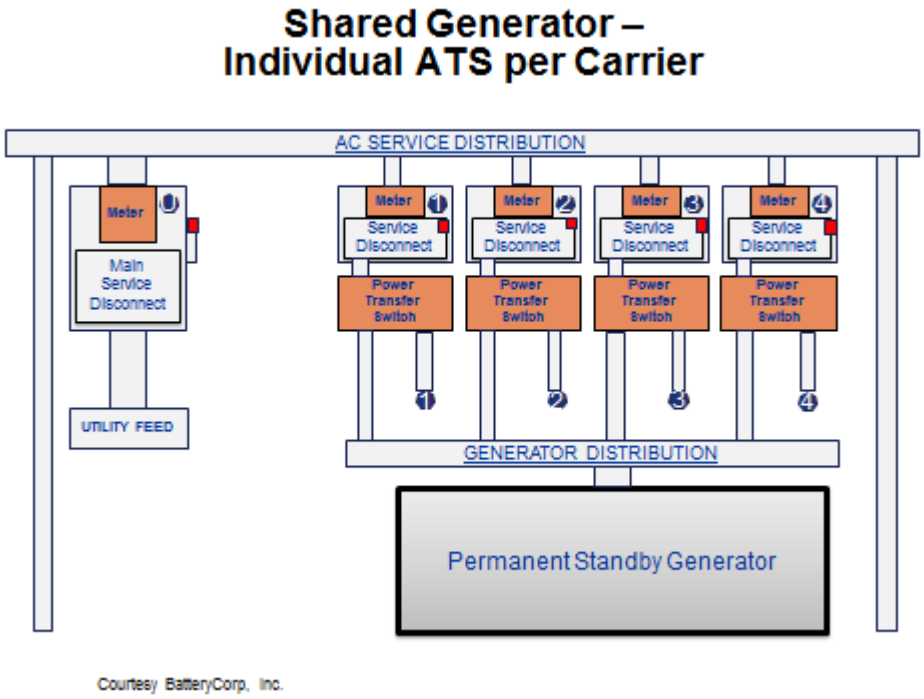

Figure #5-5 – Recommended Design: Shared Stationary Standby Generator equipped with an Individual ATS per Carrier

Advantages	Disadvantages
• Most practical and economical stationary genset solution for existing sites. At existing sites, carriers already have individual commercial service and transfer switches installed. Thus, this design is simpler for existing installations. • Each tenant retains his own commercial AC power feed. • No need for the generator owner to meter grid power usage. • Restores entire site automatically. • Supports a larger fuel reserve as compared to portable options.	• More expensive from an equipment perspective, as compared to a single ATS. • Consumes more real estate. • Greater installation complexity at a new installation. • Carrier relies on 3rd party for fuel supply and maintenance.

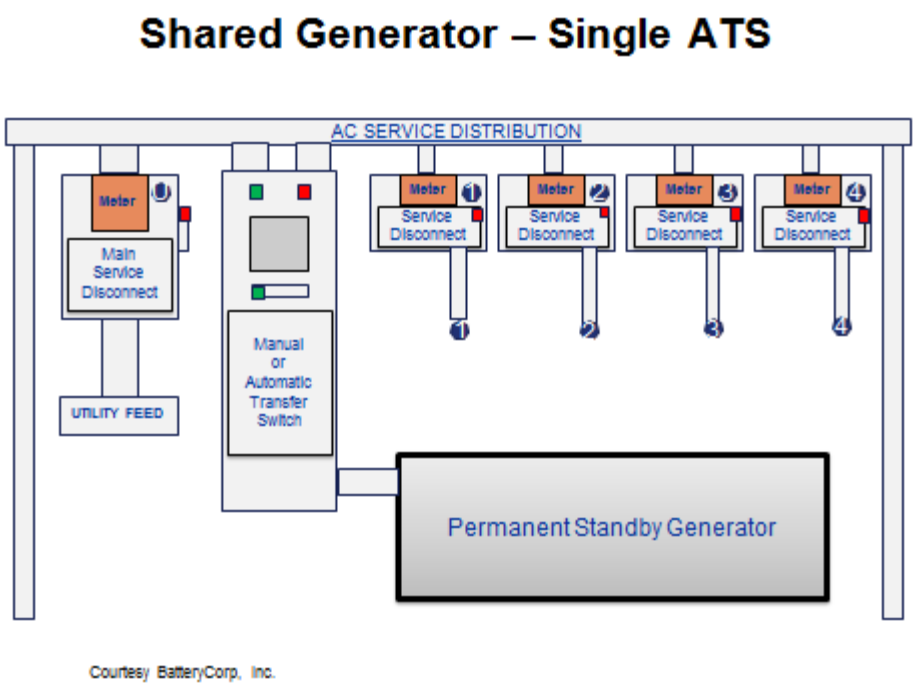

Figure #5-6 – Alternate Design - Shared Stationary Standby Generator equipped with Single ATS

Advantages	Disadvantages
• At a new installation, single ATS design is simpler and saves the cost of multiple ATS. • Restores entire site automatically. • Supports a larger fuel reserve as compared to portable options.	• Not practical for existing sites. • Need equipment to monitor individual tenant power consumption, and administration to regularly bill tenants for their share of power. • Carrier relies on 3rd party for fuel supply and maintenance.

5.5 Portable Shared Standby Power Systems

5.5.1 *Proposed Recommendations*

The following recommendations regarding portable shared standby power systems are not meant to be classified as best practices, but rather, considerations that the FCC should share with NIST and other working groups engaged in similar work.

The recommendation would be for carriers, network operators, and carrier aggregators who are considering deploying a generator as a shared resource, to consider the following:

- Multiple plug and cord interfaces (e.g., Cam-Lok™, Appleton, Hubbell; reference Table #1). It is important to document what genset plug is present at each site by carrier. A pre-defined set of cords and plug adapters that mate will be required, including agreement on where they will be stored. Failure to plan ahead may necessitate hiring an electrician during the event to perform final connections.

- Service sizes versus actual load. Many service sizes will be 240V 200A (48 kVA) per carrier, but actual load may be much less (perhaps 10-20%). A fleet of shared portable generators sized at 200 kW to serve multiple carriers may be oversized, if the actual cumulative load is in the 20-40 kW range.

- Fuel Reserve. Most portable generators have a limited fuel tank capacity, which is typically much less than what a stationary standby generator would be engineered for. Limited fuel reserve capacity places additional strain on resources to refuel more frequently. If a shared portable generator solution has to be refueled every 8-12 hours, it may not be a practical solution during an extended natural disaster.

- Site Access. Road closures and police checkpoints are common during a widespread natural disaster. A fleet of portable generators and other service vehicles can be rendered idle, as seen in Figure #5-7 (below) after Hurricane Ike. Credentials to provide access should be arranged when possible as part of the planning process. For sites located in or on secured

facilities with electronic controls the carrier should assess the capability to attain access during power outages.

Figure #5-7 – Fleet of Utility Vehicles Halted at a Police Checkpoint. Courtesy: Alexis Kwasinski

- Where feasible, portable generator owner should consider limiting the weight of a portable trailer to 3700 lbs. to enable the unit to be towed by most ½ ton pickup trucks.
- The portable generator owner should consider installing Global Positioning System (GPS) or General Packet Radio System (GPRS) tracking devices as a theft deterrent.
- Shared portable generator agreements should consider staging of the generator in advance of a pending threat or disaster event.

Applications for a shared portable generator solution include space constrained sites, where there is no physical space for multiple portable generators (reference Figure #5-2 above), and cabinet sites due to smaller loads at cabinet sites. Cabinet sites are also more likely to be served by existing fleets of smaller portable generators that carriers already own.

One method of addressing the existing variety of generator plugs is the use of a distribution box, as shown in Figure #5-8.

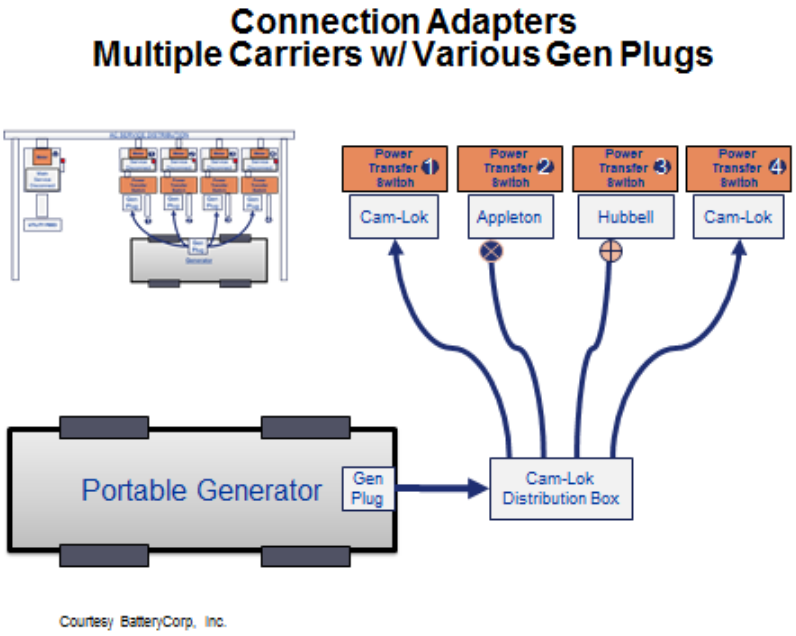

Figure #5-8 – Portable Shared Generator with an external Distribution Box

Advantages	Disadvantages
• Good fit for existing sites. • Restores entire site. • Best Plug and Cord flexibility.	• Theft. • More frequent refueling, exacerbated by larger generator and load size. • Access to deploy and refuel may be restricted.

A very similar shared portable generator solution is shown in Figure #5-9. In this case, the cord and plug compatibility is fixed, based on what is installed via the on board generator distribution box. However, with plug adapters, there is still flexibility to serve multiple carriers with variable plugs.

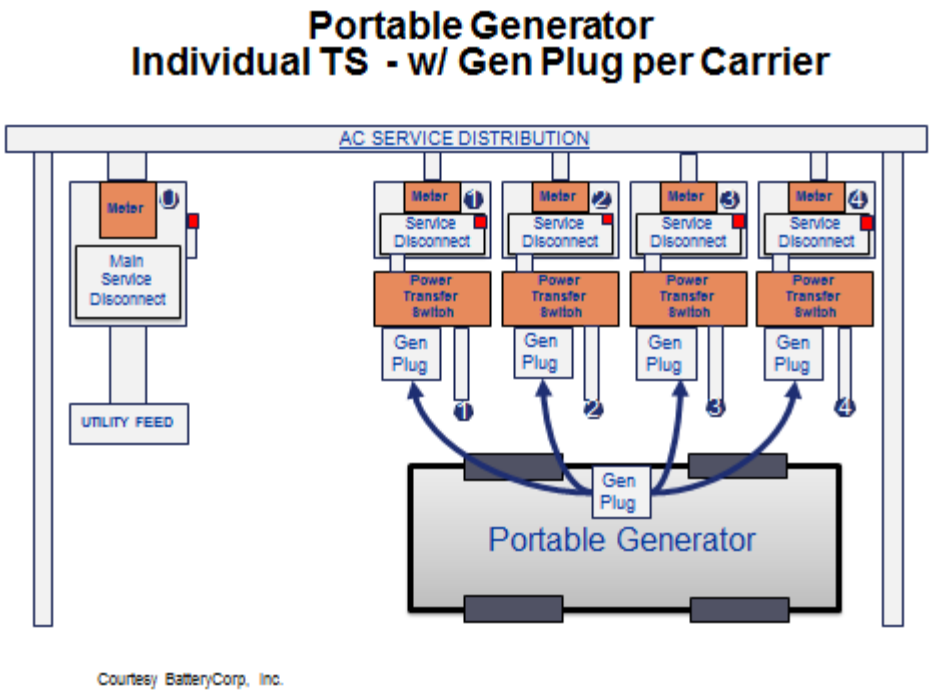

Figure #5-9 - Portable Shared Generator with Distribution Box Onboard

Advantages	Disadvantages
• Good fit for existing sites. • Restores entire site. • Plug and Cord mating is fixed, but still has flexibility with use of plug adapters. Eliminates possible weather and logistics issues associated with an external distribution box.	• Theft. • More frequent refueling, exacerbated by larger generator and load size. • Access to deploy and refuel may be restricted. • Not as flexible as an external distribution box.

The third shared portable configuration is shown in Figure #5-10. It is only viable at new sites and has a number of drawbacks that will probably limit its practical use.

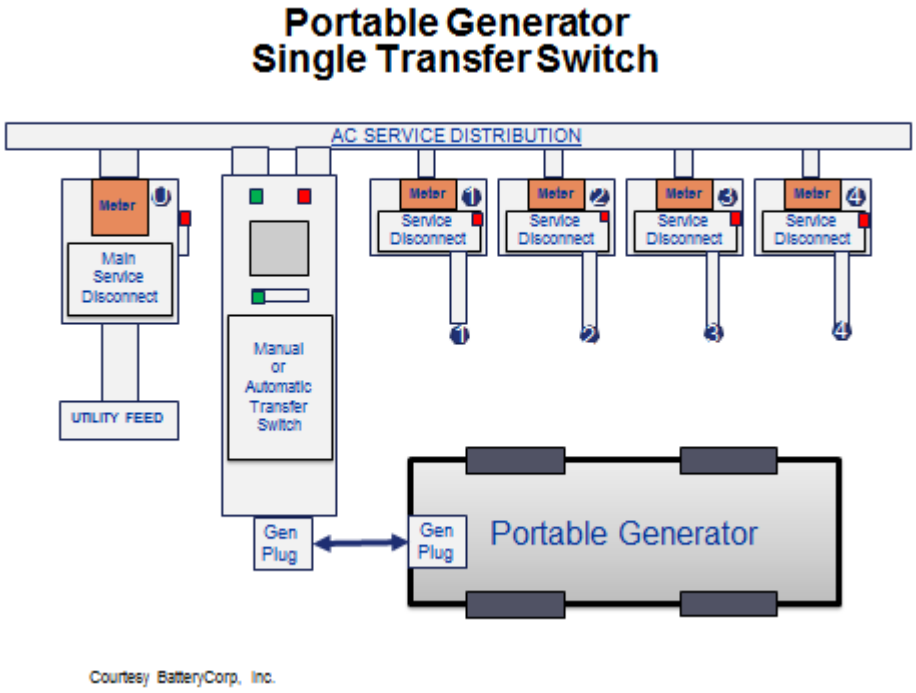

Figure #5-10 - Portable Shared Generator with a Single Transfer Switch

Advantages	Disadvantages
• For new sites, this is a low cost option. Particularly at a cabinet sized site, where an existing fleet of portable may be able to serve the site.	• Theft. • More frequent refueling, exacerbated by larger generator and load size. • Access to deploy and refuel may be restricted. • Not practical for existing sites. • Need equipment to monitor individual tenant power consumption, and administration to regularly bill tenants for their share of power.

Table #1 - Common Gen Plug Types and Adapters

Plug Configuration	**Manufacturer/ Description**
	EATON Cooper Crouse-Hinds Cam-Lok™
	Appleton
	Hubbell
	Adapters

	Cable Kits
	In Field Pin Kits
	Distribution Boxes

5.5.2 *Portable Generator Plug*

A generator plug is a generic term that indicates a type of connector used to connect a generator to the equipment it needs to support. The term can be generically applied to both the corded plug and receptacles at the equipment (aka, tap box) and portable generator.

There are different types, but all perform the same basic function.

Most carriers will keep a database of what type of service and connection is at each site, in addition to cable length needed and suitable locations for a portable generator to be placed. This helps streamline communication during an outage, allowing the carrier to ensure the generator is dispatched of the proper service type with the correct Gen Plug on board.

Most generator teams carry an assortment of adapters and/or connectors to be able to fabricate a cable in the field. This is also common as the distances to the connection point can vary, depending on suitable location, and/or available space at the time of deployment.

Proper planning and a maintained, current database is the key to quick, trouble free deployments. Not only is it important to know the connection specifics at the site, the plan should be comprehensive to include generator providers, maintenance teams, refueling vendors, and landscaping/access clearing crews.

5.6 Generator Sizing

5.6.1 *General Considerations*

Most carrier commercial AC service at a wireless facility is at 240V / 200A for a maximum power requirement of 48kVA. Many carriers deploy 35-50 kW generators, which at a typical 80% load equals 28-40kW maximum expected continuous load. When a generator is oversized, the drawbacks are primarily economic, as long as the load is large enough to prevent wet stacking and the fuel can be

consumed in a reasonable amount of time. When a generator is undersized, it cannot function properly. Mitigating actions may include load sequencing or load shedding. Ultimately, the generator must be replaced, as loads grow. Thus, the natural tendency is to oversize the generator.

Right sizing a generator increases risk of requiring a generator upgrade in the future (i.e., as tenant demand grows or new tenant enters site). Replacing a generator with a larger one will adversely impact the economics of the original agreements. Zoning, permitting, and regulatory requirements increase costs and can impede the future ability to replace a generator.

In the shared portable generator scenario, where manual transfer switches are utilized, generator owners and carriers need a defined procedure to bring each carrier on-line. In some cases, it may be necessary to consider sequencing loads within each carrier, such as delaying HVAC start for some minor time period, to mitigate inrush current. These details should be negotiated as part of the shared generator agreement.

5.6.2 *Disadvantages to Oversizing a Generator*

In a shared stationary standby generator scenario where multiple carriers will be served, conservative power estimates for each carrier compound to oversize the generator are needed. A good understanding of the actual load per carrier is required to ensure the shared generator is not grossly oversized, while sized to adequately handle inrush current, particularly from multiple HVAC compressors starting at the same time.

Generators are expensive to buy, install, and maintain. The primary disadvantages of oversizing a generator are economic and environmental (i.e. increased invested capital, wasted fuel, fuel degradation, wet stacking, maintenance costs, etc.).

Example: Consider a shared generator owner who sizes the generator assuming four (4) carriers will be ultimately served by the generator. If each carrier is assumed to have a 40 kW continuous load, then a 200 kW generator is selected (200 kW * 80% max load = 160 kW). To provide 72 hours reserve, the calculated fuel tank size is ~1,150 gallons. Given the standard product sizing for many fuel tank manufacturers jumps from ~1,000 gallon to the ~2,000 gallon size, it is likely the 2,000 gallon size will be selected. Now assume that only 1 or 2 carriers sign up to the shared generator agreement, and each only has a 20 kW load, for a total load of 40 kW. It may take 500 hours at 40 kW load to consume 2,000 gallons of fuel. Under normal routine maintenance engine runs, this may equate to 5-10 years to consume the fuel (assuming there are no commercial AC outages during this time).

The American Society for Testing and Materials rates diesel fuel stability at one year. If an extreme event occurs in year 3, it is likely the fuel filter will become clogged and the generator will stall within the first 24 hours of operation. Fuel stabilizing additives are commercially available that will extend the storage life of diesel to some extent, but it is likely that in this example the generator owner will be forced to periodically replace degraded fuel.

Shared generator owners may have to disregard the typical fuel tank sizing rule of thumb to "round up to the next standard tank size." Another method to mitigate fuel degradation is not to fill the tank

completely if the tank is oversized for the realized load, although water accumulation resulting from condensation is a concern with partially filled above ground tanks.

5.6.3 *Fuel Tank Sizing*

- 48-72 hours at full capacity is desirable at wireless sites to support critical activities for stationary standby genset installations. Larger fuel tanks may trigger environmental and hazardous material storage and permitting requirements.
- As discussed in the previous section, the typical rule of thumb is to round up to the next standard size tank. In the case of a shared generator, where the generator owner is unsure how many carriers will eventually sign up for the service and thus what load may be realized, consideration should be given to right size the fuel tank, or not to completely fill the tank under normal conditions.
- Portable fuel tanks have a practical limit to fuel reserve capacity. This limit presents a challenge for a fleet of large shared portable gensets – if the fuel reserve is limited to 24 hours or less, can the generator owner logistically refuel a large number of sites continuously during an extended event?

5.6.4 *Managing Carrier Load Growth*

Generator owners and carriers must determine how to manage the reporting of growth of each carrier's load. Agreements may need to specify that carriers are required to report back growth in power demand to the shared generator owner. One possible scenario may be to establish a kW limit allocation for each carrier and have the carrier report when they will exceed their limit.

5.7 Site Criteria

Site conditions are a key component in determining the best design for a given site. General considerations include:

- Matching fuel supply, refueling capability, and standby power source to site conditions.
- Understand permit requirements and any generator exercise time limits (e.g. in an EPA Clean Air Act non-attainment area).

Match standby power source and size to the most likely type(s) of disaster events for the region.

5.7.1 *Examples of Site Conditions That May Dictate Standby Generator Design*

The following examples are included to demonstrate why site conditions must be considered when designing a standby generator solution.

Figure #5-11 reflects a site that has been engineered to be resilient to the anticipated disaster that may affect the site. This wireline site is located in the New Orleans "bowl" area, which is below sea level. A flood event is the most likely disaster, as evidenced after Hurricane Katrina. Thus, placing the equipment and standby generator on an elevated platform above the anticipated flood plain is a prudent design. In addition, local codes prohibit above ground diesel fuel tanks. Given that it is very difficult to refuel an underground diesel fuel tank during a flood event, a natural gas fueled generator is a viable option. While not a perfect solution (site is subject to flood hazards such as floating debris slamming into the ground level meter, uplift of buried piping), this site did survive Hurricane Katrina.

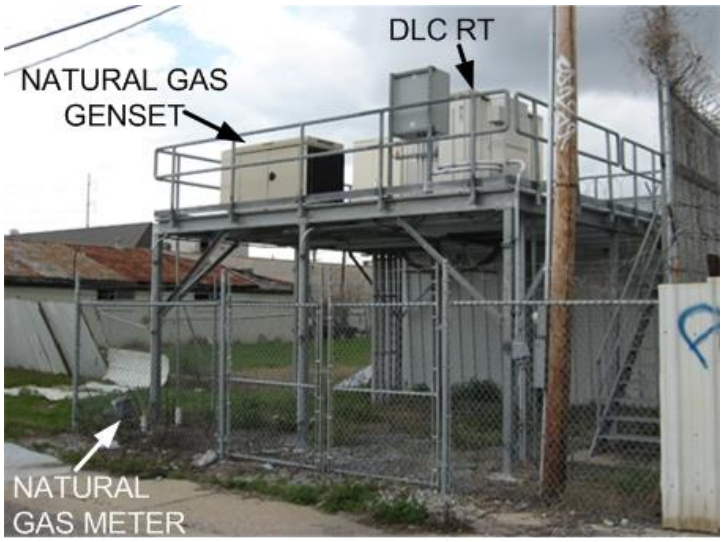

Figure #5-11 - New Orleans Wireline Site – Example of Site Conditions Dictating Design.
Courtesy: Alexis Kwasinski

Figure #5-12 is an example of a gulf coast cell site that did not survive, due to poor fuel system design. The standby generator and wireless equipment were placed on a platform above the anticipated storm surge and survived. However, the aboveground propane fuel tank was torn from its pad, rupturing its piping and rendering the standby generator useless.

Figure #5-12 - Gulf Coast Wireless Site – Example of Poor Fuel System Design.
Courtesy: Alexis Kwasinski

5.7.2 *Fuel Alternatives*

- **Diesel Fueled Generator**: Diesel will be the most universally available fuel source. Major generator manufacturers have regional distributors who stock parts and employ certified technicians and mechanics. Thus, the diesel generator is the logical first choice for shared standby power. Disadvantages include: air permitting, spill containment, diesel fuel tank leak detection, property setback, and noise abatement requirements. Environmentally sensitive sites, such as wetlands, National parks, State parks, golf courses, or urban rooftops may be poor candidates for diesel fueled standby generators.
- **Biodiesel:** Pure biodiesel (designated B100) should never be considered for use in a carrier standby generator. However, blended biodiesel up to 5% (designated B1 – B5) may be considered, and can improve diesel fuel performance. In order to comply with EPA ultra-low sulfur diesel (ULSD) requirements, many refineries or distributors are adding up to a 2% biodiesel blend (designated B2). 2% Biodiesel also improves lubricity and is harmless to a standby generator (although some major generator manufacturers may not agree). Many times, the refineries or distributors are adding the 2% blend without notifying their customers. Blends higher than B5, however, should generally be avoided. There are concerns regarding long term storage, cold weather performance (higher cloud point temperature), algae growth, and warranty voidance. For further information, see U.S. DOE NREL "Biodiesel: Handling and Use Guidelines," Fourth Edition, January 2009.
- **Gasoline Fueled Generator**: Gasoline is highly flammable, more prone to theft, and more toxic to the environment if there is a spill. For these reasons, gasoline fueled generators are typically rejected for telecommunications standby applications.
- **Natural Gas Fueled Generator**: The most obvious advantage to natural gas (NG) fueled generators is the elimination of refueling. However, NG is rarely available at remote cell sites, which eliminates it from consideration at most rural sites. In addition, NG mains may be turned off by fire officials immediately after a seismic event, wildfire, tornado, or any other event deemed necessary. NG disruptions are typically local in nature, as opposed to regional. In those urban and suburban non-seismic areas where NG is available, it can be a viable choice.
- **Propane Fueled Generator:** Propane can be a viable alternative where it is available. When a propane fueled generator is selected, consideration should be given to a buried propane tank with a cathodic protection system. Benefits of a buried propane tank include elimination of most forms of vandalism and protection from storm surge (assuming the flooding recedes before refueling is necessary). Note that many standby generators can be fueled by either NG or propane, making propane an alternate back-up fuel source for NG fueled generators. Disadvantages of propane include: code setback and clearance requirements, vandalism (aboveground tanks), and refuel capability of local distributors - particularly after an extreme event.
- **Hydrogen Fuel Cell:** Obvious advantages for hydrogen fuel cells are zero-emissions and nearly silent operation. Fuel cells are an alternative to traditional diesel, NG, or propane generators. Air-quality permits required for combustion generators in California are not required. The noise emissions from the fuel cell are minimal, typically less than a Base Transceiver Station (BTS) cabinet. Additionally, environmental permitting, maintenance,

and inspection costs associated with diesel generators and diesel fuel tanks are avoided. Primary disadvantages include high cost, limited reserve capacity, and hydrogen as the least available fuel source. Sites with a stationary fuel cell have still required portable diesel generator deployments during extended natural disasters, as shown in Figure #5-13. Fuel cell systems are best suited for sites in areas with strict regulatory requirements or are environmentally sensitive. However, due to the DC output of a fuel cell, the focus team does not see an opportunity for using fuel cells as a *shared* source of standby power.

Figure #5-13 – Portable Diesel Genset Required at a Site equipped with a Standby Fuel Cell.
Courtesy: Alexis Kwasinski

5.8 MAINTENANCE

Any standby power system is undermined if maintenance is ignored. Generators must be exercised if the operator is to expect them to perform when needed. Like any internal combustion engine, periodic replacement of fluids, filters, belts, and hoses are essential to reliability. Areas of particular concern include:

- **Start Battery**: The primary cause for standby generator failure is a dead start battery. Routine generator exercise runs will identify the vast majority of start battery issues. Proper selection of a start battery and battery charger is also critical. Money spent on a reliable, properly sized start battery and charger from a reputable manufacturer is money well spent. Some start batteries can self-discharge when left on open circuit (uncharged) or in storage. Be sure to follow manufacturer's recommended freshening charge interval. If not followed, the batteries can suffer permanent loss of capacity.

- **Fuel System**: The #2 cause for standby generator failure is lack of fuel. Root causes include a clogged fuel filter, fuel pump failure, water in the fuel tank, and a fuel piping valve left in the closed position. A common root cause for clogged fuel filter is diesel fuel degradation

caused by failure to consume the fuel in a timely manner. Properly sized fuel tanks (not too small, not too large) are an important consideration. Again, routine generator exercise will identify the vast majority of these issues, and ensure fuel will be consumed and not degrade. Annual filtering of fuel, typically using a tighter micron filter, can be beneficial, particularly in high humidity areas.

- **ATS:** A common flaw during routine engine runs is failure to operate the generator under load and thus test the transfer of power to the standby source (i.e., failure to test the function of the ATS). A routine engine run without placing the engine under load 1) is harmful to the diesel engine, leading to a condition called "wet stacking", 2) fails to verify that the ATS is performing correctly, 3) fails to verify alternator function, and 4) fails to verify if the generator is still capable of supporting the connected load. Testing the ATS is more complicated in a shared standby power arrangement that utilizes multiple ATS (one per carrier). ATS systems should be set to perform "loaded exercise" cycles.

While critical to maintaining the reliability of the standby power system, these issues are common with any standby power system, shared or dedicated. The Focus Team has reviewed the existing standby AC maintenance Best Practices and found them to be adequate.

5.8.1 *Managing Carrier Maintenance and AC Electrical Work*

When a carrier sends an electrician to the shared generator site to perform work that may affect the generator or other carriers, the generator owner needs to be informed. Changes to the electrical infrastructure must be communicated and approved to ensure it does not impact other carriers or the shared generator. Conversely, if the generator owner is performing maintenance on the generator or changes to the electrical infrastructure, then the affected carriers must be informed. A Method of Procedure (MOP) to inform the other parties of any maintenance or electrical infrastructure changes must be part of a shared generator agreement.

6 Portable Generators and Fuel Sharing

6.1 Scope

This portion of the report will address the Shared Resources Subcommittee's findings in regards to the implementation and utilization of a shared resource model including, but not limited, to:

1. How wireless carriers can approach the sharing of resources such as portable generators, fuel, and other assets.
2. Networks and resources (FEMA, the military, U.S. Government) carriers could utilize to fulfill their primary purposes of asset and resource coordination.
3. What can be learned from the Electric Power Industry's Mutual Assistance Network and how carriers can utilize their methods and processes within the wireless industry.
4. How a shared resources network would assist carriers in gaining priority access to fuel terminals and other resources.

5. Current and new best practices in regards to small cells, portable generators, bulk fuel efforts, etc.
6. The draft of an internal and external resource communications matrix to be utilized in the collecting of mutual interests and resources prior to and during a major disaster event.

6.2 Overview

Historically, carriers have each responded independently during disaster recovery and restoration efforts. In recent years, disasters have proven to be a challenge due to a greater reliance upon cellular communications. Carriers have used company owned assets or have outsourced portable generator fleets, fueling, and other resources during these times. More recently, carriers have explored various methods of sharing generator assets but have yet to find a solution that is cost effective and reliable.

The resource focus group has examined the current means of sharing resources and recommend a set of best practices that providers could use to more efficiently apply asset and resource sharing methods to sustain networks in future events. The purpose was to identify best practices for sharing portable resources around asset transportation, access to fuel (priority at terminals), sharing refueling drivers, common staging locations for generators, and shared driver, truck, and trailer pools for technicians and equipment delivery to sites. These practices do not, of course, replace the need for individual carriers to adequately invest in the resiliency of their own networks and their service restoration practices and capabilities.

6.3 Approach

Beginning with the desired end result in mind, we start with ways to create greater efficiencies at the sites concerning the following:

- Stationary and portable shared generators
- One fuel type utilized at each site if shared generators are not an option.
- Utilization of one fuel delivery driver regardless of how many carriers are at the site.
- Shared portable generator fleets.
- Shared staging facilities.

Having a shared generator with one fuel source will create an opportunity to streamline restoration services and create a more cost effective approach to recovery efforts.

- The supply and delivery of one fuel type as opposed to several fuel types, eliminates the need for multiple suppliers. Example: 2 diesel generators, 1 unleaded gasoline and 1 propane equals 4 suppliers, 3 fuel types
- More cost effective and safer, and eliminates some of the environmental concerns created by multiple suppliers responding to each site.
- One fuel delivery driver is more cost effective and creates efficiency.
    - Four carriers at a site requiring four fuel deliveries by four different suppliers, results in increased expense and inefficiency.
- One generator with a significantly larger fuel supply to extend run time.
    - To eliminate some of the environmental concerns with having a larger quantity of fuel onsite. Utilization of multiple diesel tanks to create a larger supply as opposed to one larger tank will greatly reduce the impact should a spill occur. For example: three, 200

gallon tanks with a gravity or pressure feed instead of one, 600 gallon tank reduces the exposure should the tank be damaged causing a leak. If a leak does occur it will only release what is in the individual tank. NFPA codes can be met with a fire proof plate being placed between each tank onsite. Fuel should not be stored inside the shelter.

- Sharing a portable solution would save on the transportation, deployment, maintenance, staging facility, and fuel delivery cost for all involved.

6.4 SHARED RESOURCES

6.4.1 *SHARING OF REFUELING RESOURCES*

During a large disaster, hundreds-if not thousands of portable and stationary generators are providing power to cell sites. Each of these generators needs to be fueled approximately every 48 hours. Typically, each carrier is utilizing their own set of refueling resources. These are dedicated refueling trucks delivering fuel into the carrier's own generators. This is inefficient, ineffective, and much more expensive for the carriers than sharing refueling trucks and drivers. The refueling vendors are dedicated to each carrier and charge them a per hour fee for each resource deployed. This cost quickly adds up as refueling drivers are standing by waiting for dispatch or sitting in traffic. Additionally, travel costs are absorbed by each carrier for every resource deployed.

During Super Storm Sandy the most significant damage and lingering outages were within a 50-mile radius of New York City. **Nearly 18 million people live inside that same 50-mile circle. By comparison, About 18.5 million people live in the entire state of Florida.** Consider the conditions that would occur if you were to put every person who lives in Florida, and their entire wireless infrastructure, inside a 50-mile circle. Then turn off all traffic control devices, pile debris on the roads from wind and storm surge, and leave most of the people and their vehicles in place as opposed to mass evacuation. This was the environment the carriers and their fuel service providers were operating in following Super Storm Sandy. There were urban market challenges with refueling given inoperable traffic lights and mass congestion on the roads. By each carrier having dozens of dedicated refueling trucks and drivers, it only added to the frustration, congestion, and bottlenecks at the cell sites.

If carriers were to pool refueling resources together and 'pay by the refuel' it would be much more effective and efficient. Not only would there be fewer vehicles on the road, there would also be less congestion at the cell sites as well. If a refueling vendor showed up to a cell site, they could top off two to three generators vs. refueling just one and leaving. This approach would also ease the operating expense burden put on the carriers during a disaster refueling.

This does present challenges however, because the fueling vehicles typically carrying <1,000 gallons of fuel. This means that they would only be able to hit one site before having to re-supply their vehicle to make another refuel run.

6.4.2 *STAGING FACILITIES*

Historically, carriers have utilized internal resources and locations for staging of portable generators or fuel. Depending on the magnitude of the disaster it is not always logistically feasible to find these

locations. In other cases it may be due to space constraints or damage to the carrier's facility. The following matrix is being provided in order to streamline the process of procuring a location in the midst of recovery efforts already underway.

Staging Yard Contacts – Appendix C

The list being provided consists of transportation and logistics companies. These companies are capable of providing an all-in-one solution. The all-in-one-solution includes, but is not limited, to:

- Indoor Warehousing
- Outdoor Warehousing
- Secure Paved Yards
- Forklifts
- Labor
- Cranes or Boom Trucks
- Temporary Office Facilities
- Loading and Unloading Labor (Crane)
- Dock Access (Warehouse)
- Generator Deployment
- Diesel Mechanics (Portable Generator Repair and Maintenance)
- Inventory Management
- Spill Containment

6.4.3 *Bulk Fuel Resources*

It is recommended that Bulk Fuel be kept in transports in order to maintain mobility. This allows the sharing of fuel should one carrier have the availability of releasing unused gallons and another carrier have the need.

Maintaining the mobility will allow employees accessibility during recovery efforts due to lack of fuel resources. Mobile fueling stations can be shared by the carriers and should be considered for future storms. Mobile fueling stations provide carrier employees access to fuel at strategic locations that enable continued recovery efforts.

Carriers who use off road or dyed diesel should consider removing this requirement for off road diesel (dyed) during disaster recovery efforts. This will alleviate procurement constraints when trying to locate fuel resources. It will also allow for the fuel to be used by company vehicles along with generators. The use of off road diesel is not a requirement for standby generators.

Bulk Fuel Racks

Bulk fuel racks can be identified here: http://www.opisnet.com/resources/rackcode.aspx.

See Appendix D for Fuel Supplier Contact list.

6.4.4 *Wireless Mutual Assistance Networks*

The sharing of resources and assets between providers is a seemingly new concept within the wireless industry. However, it has proven to be an effective solution for restoration efforts within the Electric Power and Energy industry for years. The Mutual Assistance Network is a voluntary partnership of electric utilities across the country. These partnerships, managed by smaller groups divided into regions (Regional Mutual Assistance Groups or RMAGS), are committed to helping restore power whenever and wherever assistance is needed. Created decades ago, the Mutual Assistance Network provides a formal yet flexible process for utilities to request support from other utilities in parts of the country that have not been affected by the major weather event. Partnerships in the mutual assistance network are based upon voluntary agreements between electric utilities within the region. When a utility determines that it needs restoration assistance, it initiates a request through an RMAG. Once a request has been made, the RMAG facilitates the process of identifying available crews and resources and helps utilities coordinate the logistics and personnel involved in restoration efforts.

It is proposed that the wireless industry could potentially initiate a program and process similar to that of the Electric and Power Industry's Mutual Assistance Network, or alternatively to approach them with an opportunity to merge effort to strengthen and utilize their current voluntary network. By that same token, the procedures and protocols developed in any such program should ensure that individual carriers' incentives to invest in their own service restoration and network resiliency resources are not undermined. Alternatively, the carriers could take advantage of an existing entity such as the US Department of Homeland Security's (DHS) National Coordinating Center for Communications (NCC), to which most of the major carriers already belong.

The benefits of a Mutual Aid Network established in the wireless industry would most likely mirror that of the Electric Power industry. This includes a quicker network restoration time, a "strength in numbers" effect that could enable requesting parties to obtain benefits such as priority access to fuel terminals, more options for staging areas, good public relations, and an overall positive affect on the recovery of multiple networks instead of a staggering recovery of several separate networks.

6.4.5 *Emergency Power Facility Assessment Tool (EPFAT)*

Following a Presidential Disaster Declaration, the U.S. Army Corps of Engineers (USACE) is often called upon by FEMA to assist in providing temporary emergency power at critical public facilities identified by state officials. If the power to critical communications facilities is disrupted, FEMA assistance in restoring power to these facilities may be requested by the State as a part of a coordinated restoration strategy developed in conjunction with telecommunications providers. In order to facilitate this restoration, facility emergency power assessment data is required before a generator can be sourced and installed.

EPFAT is a secure web-based tool that can be used by critical public facility owners/operators or emergency response agencies, to input, store, update, and/or view temporary emergency power assessment data. Having pre-installation assessment data in advance will expedite USACE's abilities to provide temporary power.

Background:

- EPFAT was developed by USACE and FEMA to expedite the installation of generators following major disasters.
- Following a disaster, it can take the USACE many hours, and possibly days, to deploy assessment teams to all of the impacted critical public facilities so that the right generators can be properly installed.
- By adding information to EPFAT prior to a disaster, USACE will have the assessment data and generator size requirements needed to expedite the installation process.
- The database also provides the facility manager and the local/state/federal Emergency Management staff a permanent off-site repository for this information which is password protected and under controlled access.

Points of Contact: For additional information, please contact one of the following EPFAT Subject Matter Experts (SMEs):

- David Bishop, Emergency Power SME (724) 459-4709 *David.A.Bishop@usace.army.mil* *(Primary)*
- Peter Navesky, ESF #3 Permanent Cadre (918) 669-7327 *Peter.Navesky@usace.army.mil* *(Alternate)*

Key Web Links:

- An EPFAT Tutorial Video: http://youtu.be/kq2CaSSRYV8
- The URL for EPFAT is: https://epfat.swf.usace.army.mil/Welcome.aspx
- Overview of the Temporary Power mission: http://youtu.be/vHCe7_4Nw5Y

6.5 Recommendations for Sharing Resources

The following recommendations regarding sharing resources are not meant to be classified as best practices, but rather, considerations that the FCC should share with NIST and other working groups engaged in similar work.

- Network Operators and Service Providers could determine the status of existing generator(s) in use by others and examine the potential for resource sharing before committing to a generator installation.
- Property Managers at multi-carrier sites could manage generator installations at the site including timing of installations and power sharing.
- Network Operators, Service Providers, and Property Managers could pursue backup power plans that add value to the overall business plan of the companies.
- Network Operators and Service Providers could collaborate in identifying opportunities and risks in choosing shared backup power sites and select locations that will provide the most value.

- Network Operators and Service Providers could, on a national and regional basis, hold meetings to discuss shared backup power opportunities on annual or more frequent basis.
- Network Operators, Service Providers, and Property Managers could ensure that backup power resource providers utilize a fleet of generators that are sized to handle the power needs of multiple carriers.
- Network Operators, Service Providers, and Property Managers could mutually plan beforehand with refueling companies to share refueling resources including post disaster coordination to share refueling resources and costs.
- Network Operators, Service Providers, and Property Managers could collaborate in establishing liaisons with emergency management recovery operations as part of the recovery process.
- Network Operators, Service Providers, and Property Managers could liaison with government emergency management in developing and exercising disaster recovery plans to include power resources.

7 ADDITIONAL CONSIDERATIONS

The following recommendations regarding sharing resources are not meant to be classified as best practices, but rather, considerations that the FCC should share with NIST and other working groups engaged in similar work.

During an emergency situation, a stationary or portable backup resource may be shared by the operators on a telecommunications site. Several aspects of this shared resource must be addressed prior to its implementation. Please note that these items are intended to guide and streamline the sharing process:

A. Ownership – Who owns the equipment? This is true for both stationary and portable installations. Ownership drives the responsibility for costs and adherence to codes and regulations, maintenance, and overall communications planning.

B. Location of Equipment – If it is temporary equipment, what is the proper location? Locations must be coordinated prior to the emergency. It should consider trailer access, re-fueling requirements, Spill Prevention, Control and Countermeasure (SPCC), power connection requirements, and ensure exhaust is not directed towards facility outside air (economizer) intakes.

C. Who will install the equipment, turn up and connect to the various operators' equipment? Development of a deployment plan is vital to an efficient operation for power restoration.

D. Who will be responsible for the operation and maintenance of the equipment? This is a contractual issue which may include designated maintenance schedules, fuel polishing, system exercising, re-fueling during emergencies, air quality requirement adherence, SPCCs, and likely performance requirements.

E. Who will be responsible for meeting the regulatory requirement for the equipment? This would include monitoring hours of operation, any fuel spillage issues, and associated cleanup.

F. Who will be responsible for refueling the equipment? Ensure this is designated upfront before an emergency arises. It may include contracts with fueling vendors. Monitoring of fuel levels is a key as runtime can vary greatly dependent on load. This can be a region wide outage which means multiple sites will be affected and a designated plan should include all sites.

G. How will the total cost of the backup resource be shared between the operators?

H. If it a temporary equipment, who will be responsible for its removal after use in the emergency situation?

I. Develop a communications plan. Dealing with a single site is fairly straight forward but a wide spread outage will be a challenge if a clear line of communication is not created. Include contacts along with secondary contacts. Keep the list to a minimum in order to keep it efficient. The communication plan should consider pre-event planning (for hurricane type events), during event planning, and post-event planning. The communications plan must be reevaluated on a revolving basis to ensure that the contacts are current.[2]

8 SUMMARY

To recapitulate, the CSRIC Working Group 9 Backup Power Subcommittee was divided into four focus groups with the end goal of providing recommendations to increase the resiliency and reliability of the telecommunications infrastructure.

This document, the output of Working Group 9 Backup Power Subcommittee, was developed through the combined effort of a multi-stakeholder community involving industry as well as public sector representatives and agencies. The collaboration and efforts of this multi-stakeholder community has provided substantive material for consideration. It is the recommendation of this working group that the FCC share the output of this document with NIST and other similar working groups who are working towards the common goal of infrastructure resiliency.

[2] *Information and Communications Technology (ICT) Performance During Extreme Events*, Alexis Kwasinski, PhD, University of Texas at Austin, 2013 INTELEC / IEEE Workshop: Preparing Information and Communication Technologies Systems for an Extreme Event

APPENDIX A- MARKET LEVEL DISASTER AND COMMERCIAL RELIABILITY POWER ANALYSIS[3]

State	Disaster Risk	Commercial Power Unreliability	Avg Rank	Wtd Avg Rank
New York	2	2	1.33	2.2
Virginia	1	3	1.33	2.3
Maryland	11	4	5.00	7.9
Pennsylvania	12	6	6.00	9.6
Ohio	4	13	5.67	9.8
New Jersey	7	11	6.00	10.1
Connecticut	10	10	6.67	11
Maine	8	14	7.33	12.4
Arkansas	19	5	8.00	12.5
Tennessee	3	19	7.33	12.9
Wisconsin	13	12	8.33	13.7
California	29	1	10.00	15.1
Florida	15	15	10.00	16.5
Oregon	6	23	9.67	16.8
Michigan	26	9	11.67	18.4
Colorado	30	7	12.33	19.2
Texas	32	8	13.33	20.8
Missouri	14	29	14.33	24.4
Illinois	25	20	15.00	24.5
South Carolina	31	16	15.67	25.1
New Mexico	5	41	15.33	27.1

[3] National Transmission Grid Study- U.S. Department of Energy

APPENDIX A- MARKET LEVEL DISASTER AND COMMERCIAL RELIABILITY POWER ANALYSIS, CONT'D

State	Disaster Risk	Commercial Power Unreliability	Avg Rank	Wtd Avg Rank
Arizona	21	30	17.00	28.5
North Carolina	36	18	18.00	28.8
Iowa	18	33	17.00	28.8
Washington DC	16	35	17.00	29
Indiana	23	31	18.00	30.1
Nebraska	9	45	18.00	31.5
Nevada	34	25	19.67	32
Alabama	38	22	20.00	32.2
Mississippi	28	32	20.00	33.2
Washington	47	17	21.33	33.7
Kansas	27	38	21.67	36.3
Utah	42	26	22.67	36.6
Idaho	22	43	21.67	36.8
Louisiana	49	21	23.33	37.1
Georgia	48	24	24.00	38.4
North Dakota	17	50	22.33	38.5
Oklahoma	45	27	24.00	38.7
Minnesota	39	34	24.33	39.9
Kentucky	37	36	24.33	40.1
South Dakota	24	49	24.33	41.4
Hawaii	35	40	25.00	41.5
Rhode Island	41	37	26.00	42.7
Wyoming	33	44	25.67	42.9

APPENDIX A- MARKET LEVEL DISASTER AND COMMERCIAL RELIABILITY POWER ANALYSIS, CONT'D

State	Disaster Risk	Commercial Power Unreliability	Avg Rank	Wtd Avg Rank
West Virginia	40	42	27.33	45.2
Delaware	44	39	27.67	45.4
Vermont	43	47	30.00	49.7
Massachusetts	46	46	30.67	50.6
Weight Value	50%	60%		

APPENDIX B- CONTACT MATRIX

	Name	Organization	Email	Phone
Tower Aggregator	Christian, Mark	American Tower	Mark.Christian@AmericanTower.com	
	Gysan, Betsy	American Tower	Betsy.Carlton-Gysan@AmericanTower.com	
	Jacobsen, Jacob	American Tower	Jacob.Jacobsen@AmericanTower.com	(206) 276-1862
	Sims, Michael	American Tower	Michael.Sims@AmericanTower.com	
	Abbio, Cliff	Crown Castle	cliff.abbio@crowncastle.com	(724) 416-2220
	O'Donnel, Pat	SBA	PODonnell@sbasite.com	(561) 322-7866
Carriers /Network Operators	Martin, Steve	ATT	sm9105@att.com	(770) 237-8399
	Naillon, Jay	T-Mobile	jay.naillon@t-mobile.com	(425) 396-3485
	Chris Oberg	Verizon	chris.oberg@verizonwireless.com	
	Brownawell, Chuck	Sprint	Carl.l.brownawell@sprint.com	(703) 592-4787
	Zinno, Richard	Sprint	richard.zinno@sprint.com	(704) 921-7374
	Daneshkhah, Shahin	Sprint	Shahin.daneshkhah@sprint.com	(623) 806-8596

APPENDIX C- STAGING YARD CONTACT MATRIX

AGENT NAME	CITY	ST	PHONE
1st Choice Moving & Storage	Kelowna	BC	250-765-6699
1st Leading Cargo	Romeoville	IL	630-633-6266
1st Leading Cargo	Romeoville	IL	630-694-0360
A Santini NY LC	Monroe Township	NJ	609-409-5921
A. Santini Mvg. & Stg.	Roseland	NJ	973-228-7211
A-1 Freeman Dallas LC	Dallas	TX	972-556-1777
A-1 Freeman Mvg. & Stg., Inc.	Oklahoma City	OK	405-751-7561
A-1 Freeman Mvg. & Stg., Inc.	Oklahoma City	OK	405-751-7333
A-1 Freeman Mvg. & Stg., Inc.	Round Rock	TX	512-246-3706
A-1 Freeman Mvg. Group, Inc.	Atlanta	GA	404-732-9006
A-1 Freeman North American	Broken Arrow	OK	918-251-2220
A-1 Freeman North American	Dallas/Fort Worth	TX	972-556-1777
A-1 Freeman Relocation	El Paso	TX	915-771-0265
A-1 Freeman Relocation Services, Inc.	San Antonio	TX	210-661-1404
A-1 Freeman Relocation Systems, Inc.	Dallas	TX	817-336-8100
A-1 Freeman Relocation, Inc.	Houston	TX	281-550-1110
A-1 Freeman-Atlanta LC	Atlanta	GA	404-732-9000
A-1 Logistics	Evanston	IL	847-757-9538
A-1 Mvg. & Stg. Co.	Appleton	WI	920-734-6052
Aadvantage Mvg. & Stg.	Killeen	TX	254-628-1583
Aadvantage Mvg. & Stg., Inc.	San Antonio	TX	210-655-2719
Aadvantage North American	Panama City	FL	850-769-6683
Aadvantage North American	Pensacola	FL	850-457-6683
Aadvantage North American	Tallahassee	FL	850-575-6683
Abbotsford Moving & Storage Ltd	Ottawa	ON	613-836-3493
ABC Mvg. & Stg., Inc.	Greenville	NC	252-752-4500
ABL X-Press Ltd	Edmonton	AB	780-448-3673
ABL X-Press Ltd	Calgary	AB	403-250-9203
Able Metro Mvg. & Stg., Inc.	Edison	NJ	732-287-0909
Abrams Mvg. & Stg. LLC	Redford	MI	313-531-0000
Absolute Transportation Services	Mississauga	ON	905-858-0066
Ace Mvg. & Stg. Co., Inc.	Gulfport	MS	228-863-5212
Acme Tfr. & Stg., Inc.	Vallejo	CA	707-643-2323
Adams Tfr. & Stg. Co.	Conroe	TX	936-756-0025
Adirondack Mvg. & Stg., Inc.	Plattsburgh	NY	518-563-0791
Advance Mvg. Systems, Inc.	Dayton	OH	937-298-0065
Advance Relocation & Stg. Systems, Inc.	Savannah	GA	912-233-1313
Affiliated Movers of Okla. City, Inc.	Oklahoma City	OK	405-677-7400
Air Van northAmerican	Anchorage	AK	907-272-0536
Air Van northAmerican	Boise	ID	208-341-1080
Air Van northAmerican	Tualatin	OR	503-885-2353
Air Van northAmerican	Tacoma	WA	253-272-9811
Air Van northAmerican	Everett	WA	425-348-4113
Air Van northAmerican	Kirkland	WA	425-629-4101
Alabama Truck Lines	Huntsville	AL	256-851-8480
Alero Relocation	Edmonton	AB	780-450-6797

APPENDIX C- STAGING YARD CONTACT MATRIX, CONT'D

Alero Relocation	Calgary	AB	403-243-0448
Alero Relocation	Winnipeg	MB	204-779-0714
Alex Mvg. & Stg.	Oxnard	CA	805-483-1125
Alex Mvg. & Stg.	Santa Ana	CA	714-549-8696
Alexander's Van & Stg., Inc.	Santa Rosa	CA	707-542-7765
All America Relocation Inc (was Leaders Mvg)	Strongsville	OH	440-846-0722
All City Mvg. & Stg.	Alameda	CA	510-749-8300
All Points	Kansas City	MO	816-763-6300
All Seasons Moving & Storage	Regina	SK	306-525-2022
Allen & Coles Moving Systems, LLC	Clinton	MA	978-368-7008
Allen & Coles Mvg. Systems, LLC	Portland	ME	207-775-6683
Allen & Coles Mvg. Systems, LLC	Hudson	NH	603-382-9362
Always Moving & Storage	Medicine Hat	AB	403-504-4500
American Van Service	Glens Falls	NY	518-793-6622
Anderson Tfr. & Stg. of Conway, Inc.	Conway	SC	843-347-4289
Anderson Tfr., Inc.	Sumter	SC	803-773-8886
Andy's Tfr. & Stg.	Glendale	CA	818-249-2017
A-OK Mvg. & Stg.	Beaumont	TX	409-842-9038
Apollo Mvg. & Stg., Inc.	Somerset	NJ	732-805-9700
Approved Moving & Storage, Inc.	Brooklyn	NY	718-452-3000
Arctic Express	Iqaluit	NT	867-979-6302
Arkansas Best Delivery	N Little Rock	AR	501-801-5890
Arnoff Mvg. & Stg. of Albany, Inc.	Albany	NY	518-463-5712
Arnoff Mvg. & Stg. of Florida, Inc.	Fort Pierce	FL	772-461-0046
Arnoff Mvg. & Stg., Inc.	Poughkeepsie	NY	845-471-1504
Arnoff Storage, Inc.	Lakeville	CT	860-435-0297
Arnoff/Stewart Liner Transportation Corp.	Poughkeepsie	NY	845-564-0240
Arnoff/Stewart Liner Transportation Corp.	Liberty	NY	845-564-0240
ASI Transportation	Green Bay	WI	920-337-6226
A-Turner Mvg. & Stg.	Gainesville	FL	352-372-0406
AVN Inc dba Champagne Logistics	Morrisville	NC	919-991-0516
Ayer Mvg. & Stg. Co., Inc.	Ayer	MA	978-772-2558
B & J Mvg. & Stg., Inc.	Kalamazoo	MI	269-385-3686
B & J Mvg. & Stg., Inc.	Battle Creek	MI	269-968-3540
B & J Mvg. & Stg., Inc.	Lansing	MI	517-484-0923
B.F. Fields Mvg. & Stg.	Erie	PA	814-454-2481
Bagnell Mvg. & Stg., Inc.	Osage Beach	MO	573-348-5518
Bajet Van Lines, Inc.	Wausau	WI	715-842-4691
Beltmann Group, Inc.	Phoenix	AZ	602-484-7665
Beltmann Group, Inc.	Santa Fe Springs	CA	562-293-4500
Beltmann Group, Inc.	Pompano Beach	FL	954-977-4552
Beltmann Group, Inc.	Orlando	FL	407-295-0636
Beltmann Group, Inc.	Atlanta	GA	678-328-2520
Beltmann Group, Inc.	Addison	IL	630-576-5090
Beltmann Group, Inc.	Addison	IL	630-576-5090
Beltmann Group, Inc.	Lenexa	KS	913-888-9105

APPENDIX C- STAGING YARD CONTACT MATRIX, CONT'D

Beltmann Group, Inc.	Roseville	MN	651-639-2800
Beltmann Group, Inc.	Roseville	MN	651-639-2800
Beltmann Group, Inc.	Roseville	MN	651-639-2800
Beltmann Group, Inc.	Morrisville	NC	919-481-4505
Beltmann Group, Inc.	S Plainfield	NJ	908-222-1125
Beltmann Group, Inc.	Parma	OH	216-267-5237
Beltmann Group, Inc.	Waukesha	WI	262-650-2865
Beltmann Integrated Logistics	Walled Lake	MI	248-926-2400
Beltmann LA DC	Santa Fe Springs	CA	562-623-4662
Bestway Mvg. & Stg., Inc.	Springfield	MO	417-866-6542
Bob Wootan Mvg. & Stg. Co., Inc.	Jackson	MS	601-922-1241
Border Moving & Storage	Grande Prairie	AB	780-538-1444
Boyer-Rosene Moving and Storage	Arlington Heights	IL	847-385-0274
Brisson Moving	Laval	QC	450-681-5115
Brown Logistics Solutions Inc	Columbus	OH	614-866-9111
Bruckman's Mvg. & Trucking Serv.	Owosso	MI	989-723-1800
Buckeye Moving Systems	Salem	OH	330-222-1511
Burgess Mvg. & Stg.	Riverside	CA	951-682-4300
Burgess northAmerican	Palm Springs	CA	760-327-4405
Burgess northAmerican	Banning	CA	951-849-4751
Calaway Tfr. & Stg., Inc.	Muskogee	OK	918-682-6082
Capitol Logistics	Schaumburg	IL	847-330-6363
Capitol North American	Las Vegas	NV	702-457-5353
Carey Moving & Storage of Charlotte, Inc.	Rock Hill	SC	803-324-3178
Carroll The Mover, Inc.	Quincy	MA	617-472-8040
CCSL Hoyt Limited	Dartmouth	NS	902-481-8264
Central Maine Stg. Co.	Bangor	ME	207-947-4114
Champagne Logistics	Franklin	MA	508-520-8557
Champagne Logistics	Franklin	MA	508-520-1046
Champagne Logistics	Houston	TX	713-466-5349
Champagne Logistics	Austin	TX	480-756-5478
Champagne North American	Tempe	AZ	480-736-8987
Champion Moving & Storage	Brockport	NY	585-235-3500
Champion Moving & Storage	Brockport	NY	585-235-3500
Chicago Temp DC	Chicago	IL	260-438-9595
Chilo Transport	Nanaimo	BC	250-753-2477
City Express	Yellowknife	NT	867-920-7918
City Express Northern	Whitehorse	YK	867-667-2314
City North American	Moscow	ID	208-882-2213
Classic Mvg. & Stg., Inc.	Eau Claire	WI	715-835-3002
Clemmer Moving & Storage	Telford	PA	215-723-5515
Coastal Tfr. & Stg., Inc.	Georgetown	SC	843-546-4563
Coleman American Moving Services	Midland City	AL	800-239-4099
Columbus Logistics Center	Columbus	OH	614-295-3901
Columbus Logistics Center #2	Columbus	OH	614-491-6874
Comox Moving & Storage	Lazo	BC	250-339-2281
Comprehensive Transportation Services, Inc.	Linden	NJ	908-862-0016

APPENDIX C- STAGING YARD CONTACT MATRIX, CONT'D

Cord Moving – Memphis	Memphis	TN	901-370-6400
Cord North American	Belleville	IL	618-235-5561
Cord North American	Earth City	MO	314-291-7440
Cor-O-Van Mvg. & Stg. Co.	San Jose	CA	408-428-1100
Cor-O-Van Mvg. & Stg. Co.	Poway	CA	858-748-1100
Cor-O-Van Mvg. & Stg. Co.	Dublin	CA	408-678-3200
Cor-O-Van Mvg. & Stg. Co.	San Francisco	CA	415-821-1119
Cor-O-Van San Diego LC	Poway	CA	858-762-8100
Country Wide Mvg & Stg	Saskatoon	SK	306-934-3335
Crown Tfr. & Stg., Inc.	Bogart	GA	706-543-4719
Cumberland-North American	Cumberland	MD	301-724-3900
Customized Transportation Solutions, Inc.	Taunton	MA	508-824-2222
Dalton Logistics, Inc.	Earth City	MO	314-770-0072
Dan's Mvg. & Stg., Inc.	Dunkirk	NY	716-366-7642
Dan's Mvg. & Stg., Inc.	Jamestown	NY	716-763-6683
David Mvg. Co., Inc.	Baton Rouge	LA	225-753-3240
De Haven's Tfr. & Stg., Inc.	Durham	NC	919-220-5441
Defiance Truck & Tfr. Co. Inc.	Defiance	OH	419-782-1941
DeHaven's Tfr. & Stg. of Greensboro, Inc.	Greensboro	NC	336-273-8648
DeHaven's Transfer & Storage of Charlotte Inc	Charlotte	NC	704-597-6201
DeHaven's Transfer & Storage of Wilmington Inc	Wilmington	NC	910-762-6661
Deluxe Mvg & Stg	North Bay	ON	705-472-7030
Demenagement Chicoutimi	Chicoutimi	QC	418-696-5022
Demenagement Deslauriers, Inc	Granby	QC	450-372-0066
Demenagements Rimouski	Rimouski	QC	418-723-7272
Demenagment & Transport Dolbec Inc	Quebec City	QC	418-687-3830
Dimon & Bacorn Co. of Binghamton	Vestal	NY	607-798-0099
Dimon & Bacorn, Inc.	Elmira	NY	607-734-2937
Dinsdale Cartage & Storage	Brandon	MB	204-728-3307
Direct Intergrated Trans	Calgary	AA	403-296-0290
Direct Intergrated Trans	Winnipeg	MB	204-694-0090
Direct Intergrated Trans	Regina	SK	306-352-2433
DJ Mvg. Services, Inc.	Dothan	AL	334-793-2324
Don Hemsted's Van & Stg.	Redding	CA	530-241-3456
Doss Mvg. & Stg., Inc.	Little Rock	AR	501-588-2835
Dube's Tfr. & Stg.	Williston	ND	701-572-6165
Duncan Mvg. & Stg., Inc.	Rolla	MO	573-364-1690
DunMar Moving Systems	Richmond	VA	804-271-0500
E. D. Fee Tfr., Inc.	New Castle	PA	724-658-2575
East Coast Moving & Warehousing	Moncton	NB	506-387-7730
Eckert's Van & Stg.	San Marcos	CA	760-727-2600
EE Ward Moving & Storage Co LLC	Columbus	OH	614-298-8414
Eldred Van & Stg., Inc.	Terre Haute	IN	812-466-4242
Electronic Transport Inc.	Beavercreek	OH	937-429-9928
Ellis Moving & Storage LLC	Old Hickory	TN	615-262-9090
Empire Warehouse Co.	El Paso	TX	915-592-5222

APPENDIX C- STAGING YARD CONTACT MATRIX, CONT'D

Evans Tfr. & Movers, Inc.	Clarksburg	WV	304-592-2765
Evans Van & Storage, LLC	Poca	WV	304-755-9855
Excel Moving & Storage Inc	Raleigh	NC	919-532-1971
Executive Mvg. Systems, Inc.	Anaheim	CA	714-688-4800
Exhibit Express	Wilmington	MA	978-988-9100
Exhibition Logistics Inc	Orlando	FL	407-855-4088
Family Movers	Orillia	ON	705-325-3763
Family Movers	Barrie	ON	705-722-6740
Federal Warehouse Company	East Peoria	IL	309-694-4500
Ferguson Tfr. Co., Inc.	Coos Bay	OR	541-888-5578
Ferree Movers & Stg., Inc.	Crown Point	IN	219-662-2700
Ferree Movers, Inc.	Highland	IN	219-924-9600
Fettes Transportation Systems	Fargo	ND	701-277-3631
Fidelity Mvg. & Stg. Co., Inc.	Fayetteville	NC	910-485-2186
Fidelity Mvg. & Stg. Co., Inc.	Jacksonville	NC	910-353-1919
Fidelity Mvg. & Stg. Co., Inc.	New Bern	NC	252-638-2980
Findlay Moving & Storage	Mount Vernon	NY	914-699-1100
First Class Moving Systems	Tampa	FL	813-889-0308
Fisher North American	Hamburg	NY	716-649-2352
Florida Mvg. Systems, Inc.	Melbourne	FL	321-259-4330
Flowers Tfr. Corp.	Broussard	LA	337-837-2802
Fontaine's Moving & Mini Storage	Fort St. John	BC	250-785-1166
Francis Rush Transfer	Charlottetown	PE	902-894-4566
Fridrich northAmerican	Cleveland	OH	216-676-0500
Frost The Mover	Belleville	ON	613-962-5340
Frost The Mover	Kingston	ON	613-549-9901
G. Fournier Van & Storage	Bathurst	NB	506-546-5634
Galbraith Van & Stg. Co., Inc.	Bakersfield	CA	661-327-5151
Gale Tfr., Inc.	Yuma	AZ	928-782-1877
Garrison Trucking LLC	Hardinsburg	IN	812-472-3220
Geo. W. Weaver & Son, Inc.	New Cumberland	PA	717-774-7835
Georges O. Dubois, Inc.	Sherbrooke	QC	819-864-6864
Global Mvg. Systems, Inc.	San Diego	CA	858-824-1903
Golden Isles Mvg. & Stg.	Brunswick	GA	912-264-2230
Gossard Mvg. Serv., Inc.	Lima	OH	419-225-4818
Government Logistic Services	East Berlin	PA	717-292-2191
Graham's Moving & Storage	Prince George	BC	250-564-5855
Granite City Mvg. & Stg., Inc.	Sartell	MN	320-252-1311
Great Plains Denver LC	Denver	CO	303-373-1332
Great Plains Moving & Storage	Denver	CO	303-373-1332
Great Plains Moving & Storage	Colorado Springs	CO	719-597-8850
Greater Bay Area-North American	Corona	CA	951-284-2940
Greater Syracuse Mvg. & Stg. Co., Inc.	N Syracuse	NY	315-458-9080
Greaves Moving & Storage	Victoria	BC	250-388-7808
Green's Mvg. & Stg., Inc.	Rapid City	SD	605-342-7060
Groupe T.A.P. Inc	Amos	QC	819-732-3741
Guardian Transfer & Storage	Dartmouth	NS	902-435-2824

APPENDIX C- STAGING YARD CONTACT MATRIX, CONT'D

Guardian Transfer & Storage	Middleton	NS	902-825-6485
H & S Warehouse, Inc.	Fairbanks	AK	907-452-1286
Hanover Tfr. & Stg.	Hanover	NH	603-643-3103
Harrisburg Stg. Co.	New Cumberland	PA	717-774-7835
Hawkeye Moving Services Inc	Iowa City	IA	319-668-5440
Hazen Transport, Inc.	Taylor	MI	313-291-4520
HHM Transportation Solutions	Moncton	NB	506-383-4698
HHM Transportation Solutions	Dartmouth	NS	902-468-9808
HHM Transportation Solutions LTD O/A M&D Express	Mount Pearl	NF	709-747-4291
Highland Van & Stg	Delta	BC	604-929-2384
Hollister Mvg. & Stg.	Hollister	CA	831-637-6250
Homestead Tfr. & Stg. Co.	Homestead	FL	305-247-5012
Hoover the Mover	Fort Wayne	IN	260-459-6926
Household Movers and Shippers	Fredericton	NB	506-451-9520
Household Movers and Shippers	Goose Bay	NF	709-896-5534
Household Movers and Shippers	Corner Brook	NF	709-634-2434
Household Movers and Shippers	Mount Pearl	NF	709-747-4222
Household Movers and Shippers	Gander	NF	709-651-2050
Hudson northAmerican	New York	NY	212-678-4862
Hug-Condon Mvg. & Stg. Co., Inc.	Hanrahan	LA	504-733-1483
ICAT Transport Inc.	York	PA	717-840-0200
J & J Mvg. & Stg. Co., Inc.	Newnan	GA	770-253-5854
J.A. Haralson Mvg. & Stg., Inc.	Tyler	TX	903-593-2525
J.A. Haralson Mvg. & Stg., Inc.	Longview	TX	903-757-3244
J.J. Murphy, Inc.	Chicago	IL	312-225-3323
Jack's Moving	Regina	SK	306-522-4040
Jackson Mvg. & Stg. Co., Inc.	Goldsboro	NC	919-735-2953
Jackson's Tfr. & Stg.	Aiken	SC	803-648-4217
Jacobson's Mvg. & Stg, LLC	La Crosse	WI	608-784-8957
John E. George, Inc.	Freedom	PA	412-961-0297
John E. George, Inc.	Freedom	PA	724-371-3130
Keller Mvg. & Stg., Inc.	Allentown	PA	610-797-4886
Kettering Mvg. & Stg., Inc.	Dayton	OH	937-298-6325
King Logistics LLC	Tampa	FL	813-881-1799
King Logistics LLC	Orlando	FL	407-516-9678
King Logistics LLC	Miami	FL	305-433-1919
King's North American	Wichita	KS	316-524-9191
King's North American	Junction City	KS	785-238-7341
King's North American	Kansas City	MO	816-483-9500
Koldon Mvg. & Stg., Inc.	Lake Zurich	IL	847-438-3300
L & J Transportation Companies Inc	Temple	PA	610-921-2063
Lambert Tfr. & Stg., Inc.	Opelika	AL	334-745-5706
Las Cruces Mvg. & Stg., Inc.	Las Cruces	NM	575-382-9040
Lawton Mvg. & Stg., Inc.	Lawton	OK	580-353-0754
Lentz Tfr. & Stg. Co.	Clemmons	NC	336-766-7331
Lile Logistics Services	Tualatin	OR	503-691-0530

APPENDIX C- STAGING YARD CONTACT MATRIX, CONT'D

Lile Logistics Services	Salem	OR	503-393-0110
Lile Logistics Services	Eugene	OR	541-689-6683
Lile Logistics Services	Kent	WA	253-872-2220
Lile Logistics Services	Spokane	WA	509-534-1554
Lile Logistics Services	Longview	WA	360-423-2260
Lile Logistics Services	Vancouver	WA	360-892-1454
Lile Logistics Services	Lakewood	WA	253-584-2222
Lile Logistics Services	Kent	WA	253-872-2222
Lile Logistics Services	Bremerton	WA	360-377-3863
Lile Logistics Services-Corporate Offices	Tigard	OR	503-726-4800
Livingston Mvg. & Stg.	Watertown	NY	315-782-1090
Lloyd The Mover (Pembroke) Ltd	Pembroke	ON	613-732-9101
Logitrans	Salt Lake City	UT	801-886-2520
Lowry & Hogan, Inc.	Bloomingdale	IL	630-351-1800
M.S.A. Moving & Storage	Abbotsford	BC	604-859-5066
MacDougall's Transfer & Storage	Sydney	NS	902-562-1135
Mackie Alberta, Inc.	Edmonton	AB	587-881-0400
Mackie Alberta, Inc.	Calgary	AB	
Mackie Moving Systems	Oshawa	ON	905-728-2400
Mackie Moving Systems	Montreal	QC	514-856-9666
Maher Brothers Transfer & Storage	Iowa City	IA	319-337-9696
Marion Relocation Services	Marion	IN	765-664-0830
Maritime Mvg & Stg	St John	NK	506-633-9180
Maritime Mvg & Stg	Dartmouth	NS	902-468-6868
Matheson Tfr. Co.	Scranton	PA	570-344-0958
Matheson Tfr. Co.	Stroudsburg	PA	570-714-7719
Matheson Tfr. Co.	Forty Fort	PA	570-288-5469
Matheson Tfr. Co.	Humboldt	PA	570-459-0758
Mayberry's Van & Stg., Inc.	Dayton	OH	937-298-8800
McComb Relocation Services	Corpus Christi	TX	361-888-5907
McLean Moving	Lethbridge	AB	403-327-3146
McMurray Relocation Services	Fort McMurray	AB	780-790-1388
McWhite's North American	Prescott Valley	AZ	928-772-9854
McWilliams Moving & Storage	Peterborough	ON	416-749-6760
McWilliams Moving & Storage	Waterloo	ON	519-725-3060
McWilliams Moving & Storage	Peterborough	ON	705-743-4597
Meadows Van & Stg., Inc.	Frederick	MD	301-663-3155
Meadows Van & Stg., Inc.	Hagerstown	MD	301-739-3800
Medford Mvg. & Stg., Inc.	Central Point	OR	541-831-0064
Midlands Relocation Services	Omaha	NE	402-597-3185
Milne's Moving & Storage	Regina	SK	306-525-3508
Milton's Movers	Kamloops	BC	250-372-2747
Mohawk Moving & Storage	Brantford	ON	519-753-4171
Montana Tfr. Co.	Missoula	MT	406-728-8080
Mont-Bruno	St Bruno	ON	514-336-1212
Montreal Express	Lachine	QC	514-639-6888
Morales Moving & Storage	Opa Locka	FL	305-576-7000

APPENDIX C- STAGING YARD CONTACT MATRIX, CONT'D

Morgan Mvg. & Stg., Ltd.	Pottstown	PA	610-327-3100
Mother Lode Van & Storage Inc	Rancho Cordova	CA	916-631-4285
Motorcycleshipping.biz	Stockton	CA	209-323-5200
Moving Solutions, Inc.	Mentor	OH	440-946-9300
NA Logistics	Rocklin	CA	916-645-6177
National Power Sports	Pembroke	NH	603-410-4120 x3
National Storage Co	Kalamazoo	MI	269-345-6111
Nationwide Mvg. & Stg. Co.	Bloomfield	CT	860-243-9555
Nationwide Mvg. & Stg. Co., Inc.	Bloomfield	CT	800-243-4334
Nationwide Transfer Inc	Sioux Falls	SD	605-333-0620
Nelson North American	Lake Forest	CA	949-582-0380
Nevil Transportation Group	San Jose	CA	408-275-1500
Nevil Transportation Group	San Jose	CA	408-275-1500
New Sudbury Storage	Sudbury	ON	705-560-5252
Niagara Moving & Storage	Niagara Falls	ON	905-354-3183
North American Mvg. & Stg.	Davenport	IA	563-324-6667
North American Transystems	Great Falls	MT	406-455-8686
North American Van Lines Canada	Edmonton	AB	780-451-9119
North Bay North American	San Rafael	CA	415-479-5515
Northam Systems	Don Mills	ON	416-510-2447
O'Brien's-Gray's Mvg. & Stg.	Bloomsburg	PA	570-387-0470
Ocean Moving Limited	Middleton	NS	902-825-3334
O'Mara Mvg. & Stg., Inc.	Freeport	IL	815-232-2512
O'Mara Mvg. Systems, Inc.	Madison	WI	608-268-0322
Ottawa Logistics Ltd	Ottawa	ON	613-248-3553
P.R.O. Transfer, Inc	Nashville	TN	615-832-8331
Palmer Mvg. & Stg. Co.	Warren	MI	586-834-3400
Park Tfr. & Stg. Co., Inc.	Tuscaloosa	AL	205-345-0311
Park Tsf & Stg Co Inc	Birmingham	AL	205-390-0148
Pavone Transportation	Naples	FL	239-325-9222
PDQ Van & Stg. Inc.	Marysville	CA	530-742-5117
Penfold Cartage	Sault Ste. Marie	ON	705-759-6055
Peroulas Mvg. & Stg., LLC	Knoxville	TN	865-777-9555
Pickens-Kane Moving & Storage Co Inc	Chicago	IL	312-942-0330
Plains North American	Amarillo	TX	806-376-5331 806-372-1113
Portage Cartage & Storage	Winnipeg	MB	204-633-8059
Prager Logistics LLC	Naperville	IL	888-323-3726
Precision Transportation, Inc.	Chicago Heights	IL	708-756-1919
Precision Transportation, Inc.	Chicago Heights	IL	708-756-1919
Precision Transportation, Inc.	Chicago Heights	IL	708-756-1919
Precor	Woodinville	WA	801-487-4669
Premier Moving & Storage, Inc.	Columbia	MO	573-474-6158
Primex Global Services Ltd	Ottawa	ON	613-736-7878
Primex Relocation	Ottawa	ON	613-614-1999
ProRelo, Inc.	Albuquerque	NM	505-888-1007
Puckett Mvg. & Stg. Co.	Galesburg	IL	309-342-9513

APPENDIX C- STAGING YARD CONTACT MATRIX, CONT'D

QHP Moving & Storage Ltd.	Edmonton	AB	780-413-6446
Quality Tfr. & Stg. Co., Inc.	Lexington Park	MD	301-862-2331
Quincy Storage & Transfer Co	Quincy	IL	217-222-1144
Rainbow Mvrs., Inc.	Franklin	MA	508-528-4111
Ralph's Tfr., Inc.	Tucson	AZ	520-622-6461
Ramsay Freight Carrier Ltd	Ottawa	ON	613-733-9333
Rapp's Mvg. & Stg., Inc.	Wisconsin Rapids	WI	715-421-4600
Ray The Mover of Naples, Inc.	Naples	FL	239-693-6681
RD Transport	Chicoutimi	QC	418-609-2917
Redman Logistics Ctr	Billings	MT	406-252-5612
Redman Van & Stg. Co.	Lindon	UT	801-785-0851
Redman Van & Stg. Co.	Clearfield	UT	801-776-2645
Redman Van & Stg. Co.	Salt Lake City	UT	801-972-4420
Redman Van & Storage/St George	Washington	UT	435-628-8314
Reebie Storage & Moving Company Inc	Franklin Park	IL	630-281-8105
Reliable Tfr. Corp.	Juneau	AK	907-789-1490
Relocation Systems, LLC	Sterling	VA	703-925-9556
Republic Moving (Lovejoy's Family Mvg)	Chula Vista	CA	619-591-0070
Richmond North American	Richmond	IN	765-962-3578
Rocky Ford Mvg. Vans, Inc.	Midland	TX	432-683-6341
Roger Ward North American	Phoenix	AZ	602-233-0146
Roger Ward North American	Minot	ND	701-852-3614
Roger Ward North American	Garland	TX	972-272-4622
Roger Ward North American	San Antonio	TX	210-655-8623
Roger Ward North American	Killeen	TX	254-628-0452
Roger Ward North American	Austin	TX	512-834-9733
Roger Ward North American	Houston	TX	
Roseville Van & Storage, Inc.	Sacramento	CA	916-349-1119
S & D Tfr., Inc.	Lynbrook	NY	516-561-4278
S&D Transfer Logistics Inc	Cranbury	NJ	609-655-5011
S&D Transfer West, Inc.	Arlington	TX	
San Angelo Tfr. Co.	San Angelo	TX	325-655-6100
Sandercock Tfr. Co., Inc.	San Luis Obispo	CA	805-922-4567
Sandercock Tfr. Co., Inc.	San Luis Obispo	CA	805-543-6163
Santini NY NJ DC	Roseland	NJ	201-228-7211
Saunier Moving & Storage, Inc.	Louisville	KY	502-499-9996
Saunier North American	Winchester	KY	859-233-2383
Scarr Mvg. & Stg., Inc.	Salinas	CA	831-424-2784
Schuck Mvg. Systems Corp.	Valley Cottage	NY	845-358-3410
Schuman B-Line Mvg. & Stg., Inc.	Norwich	NY	607-336-1060
Schuman B-Line Mvg. & Stg., Inc.	Oneonta	NY	607-432-3800
Scott's Moving and Cartage	Stratford	ON	519-660-4598
Scott's Moving And Cartage	Stratford	ON	519-273-1432
Security Stg. & Mvg. Service of Albany, Inc.	Albany	GA	229-432-9119
Showmat Transport Co	St Charles	IL	630-444-1400
Sims & Huber Tfr. & Stg., Inc.	Bellefontaine	OH	937-592-6987
Siracusa Moving & Storage	New Britain	CT	860-225-9144

APPENDIX C- STAGING YARD CONTACT MATRIX, CONT'D

Sloan's Mvg. & Stg. Co.	Earth City	MO	314-291-8833
South Coast Logistics	Garden Grove	CA	714-894-4744
Spec Trans Agent Group-Canada	Oshawa	ON	416-213-7287
Specialty Movers Ltd	Vernon	BC	250-542-3351
Speedwell Transportation, Inc.	Lancaster	CA	661-942-1161
Stacey's (1994) Moving & Storage	St. Catharines	ON	905-685-6591
Sterling Corp BDC	Lowell	MA	978-322-2551
Sterling Corporation	Boston	MA	978-934-8600
Sterling Maryland DC	Jessup	MD	301-490-2978
Sterling Mvg. & Stg., Inc.	Bozrah	CT	860-892-6072
Sterling Mvg. & Stg., Inc.	Laurel	MD	301-498-7776
Sterling Mvg. & Stg., Inc.	Cranston	RI	401-943-3200
Sterling Trucking	Cranston	RI	401-943-3200
Stillwater Tfr. & Stg., Inc.	Stillwater	OK	405-372-0577
Tanner Van Lines, Inc.	Richmond	VA	804-377-1700
Technical Transportation	Etobicoke	ON	416-237-0558
The Moving Connection, Inc.	Linthicum	MD	443-524-1202
The Moving Mann	Augusta	GA	706-722-0478
The Ray Hamilton Co	Cincinnati	OH	513-641-5400
Three Way SPT	Fremont	CA	408-748-3921
Tippet Richardson	North Bay	ON	705-472-5109
TMV LOGISTIQUE INC.	Laterriere	QC	418-693-5338
Tobin's North American	Mitchell	SD	605-996-3498
Total Relocation Moving Systems	Mississauga	ON	905-607-7990
TR Westcan Inc	Burnaby	BC	604-879-6861
Traditional Moving & Storage	Thunder Bay	ON	807-623-3535
Trail Cartage and Storage	Trail	BC	250-368-3933
Transact LTD	Avon	MA	508-586-6500
Transpo Services, Inc.	Sheboygan	WI	920-457-1155
Triple A Relocation Systems	Riverview	FL	813-672-1000
Triple Crown Maffucci Storage Corp	Hauppauge	NY	631-348-4994
Tyler Mvg. & Stg. Systems, Inc.	New Philadelphia	OH	330-339-1800
Universal Relocation Systems, Inc.	Loves Park	IL	815-633-6600
Universal Relocation Systems, Inc.	Rockford	IL	815-756-3517
University Mvg. & Stg. Co.	Indianapolis	IN	317-870-7737
University Mvg. & Stg. Co.	Farmington Hills	MI	248-615-7000
University Mvg. & Stg. Co.	Grand Rapids	MI	616-245-9284
University Mvg. & Stg. Co.	Ann Arbor	MI	248-615-7000
University Mvg. & Stg. Co.	West Chester	OH	513-860-6700
Valley - Yellow Trans	Concord	CA	925-682-3740
Valley Relocation & Stg.	W Sacramento	CA	916-375-0001
Valley Relocation & Stg.	Concord	CA	925-682-3740
Valley Relocation & Stg.	San Jose	CA	510-490-2994
Valley Relocation & Stg.	S San Francisco	CA	650-615-7990
Valley Relocation & Stg.	San Jose	CA	408-258-0700
Valley Relocation & Stg.	San Jose	CA	408-938-3600
Valley Relocation & Stg.	Concord	CA	925-682-3740

APPENDIX C- STAGING YARD CONTACT MATRIX, CONT'D

Valley Relocation & Stg.	Jessup	MD	301-833-0003
Vernon Moving & Storage	Vernon	BC	250-545-2185
Viti Bros. Movers, Inc.	E Providence	RI	401-434-2929
Volusia Van & Stg.	Ormond Beach	FL	386-673-1005
VTS Transportation Inc	Tempe	AZ	480-736-8987
Warner-Schuitema Mvg. & Stg. Co.	Muskegon	MI	231-722-2292
Westmount Moving & Warehousing	Lasalle	QC	514-631-8884
Whalen's, Inc.	Grand Forks	ND	701-775-5557
Williams Transportation & Stg., Inc.	Leesville	LA	337-239-2210
Wood Sunproducts Inc	Crystal River	FL	352-746-6683
Wyo-Braska Mvg. & Stg. Co.	Scottsbluff	NE	308-632-7715

APPENDIX D – FUEL SUPPLIER CONTACT MATRIX

Company	Emergency Hotline (24 Hours)	Website	Services
Atlantic Tower Services	806-930-5225/407-947-2208	www.accessats.com	Full Service Emergency Management & Disaster Recovery
Atlas Oil	800-878-2000	www.atlasoil.com	Bulk Fuel
Cat5 Resources	1-855-550-2285/409-460-3069	www.cat5resources.com	Full Service Emergency Management & Disaster Recovery
Foster Fuels	800-344-6457/800-344-6457	www.fosterfuels.com	Emergency & Bulk Fuel
Macro Oil	855-263-0521	www.macrooil.com	Emergency & Bulk Fuel
Netlogix	858-764-1972	www.netlogix.com	Generator and Battery Backup Systems
Peak Power	877-657-6527	www.peakpowerservices.com	Generator Maintenance and Deployment, Project Management
Power Plus	888-970-0007	www.powerplus.com	Generator and Battery Backup Systems
Power Pro Tech	800-437-4474	www.powerprotech.com	Generator and Battery Backup Systems
Specialized Transportation Inc.	732-522-1212	www.sdtransfer.com	Transportation
Sun Coast Resources	800-677-3835 ext *783	www.suncoastresources.com	Bulk Fuel
Valrico Ventures	1-888-305-1750	www.valricoventures.com	Disaster Recovery

APPENDIX E- GENERATOR RENTAL COMPANIES

Company	Website
Aggreko North America	www.aggreko.com
Ahern Rentals	www.ahernrentals.com
Amquip Crane Corp	www.amquip.com
Art's Rental Equipment	www.artsrental.com
Blanchard Machinery	www.blanchardmachinery.com
Briggs Equipment	www.briggsequipment.com
Butler Machinery	www.bulter-machinery.com
Cleveland Brothers	www.clevelandbrothers.com
Clifford Power	www.cliffordpower.com
Empire Rental	www.empirecat.com
Equipment Depot	www.eqdepot.com
Essex Crane Rental	www.essexcrane.com
Fabick Rents	www.fabickcat.com
Foley Equipment	www.foleyeq.com
H & E Equipment	www.he-equipment.com
Hertz Equipment	www.hertzequip.com
Holt Cat	www.holtcat.com
Kirby-Smith Machinery	www.kirby-smith.com
Louisiana Rents	www.louisianamachinery.com
MacAllister Machinery	www.macallister.com
Maxim Crane Rental	www.maximcrane.com
Milton Cat	www.miltoncat.com
Mustang Cat	www.mustangcat.com
Neff Rental	www.neffcorp.com
NES Rentals	www.nesrentals.com
Ohio Cat	www.ohiocat.com
Peterson Tractor	www.petersoncat.com
Puckett Rents	www.puckettrents.com
Ring Power	www.ringpower.com
Safway Services	www.safway.com
Scott Construction	www.scottcompanies.com
Sims Crane	www.simscrane.com
Star Rentals	www.starrentals.com
Sunbelt Rentals	www.sunbeltrentals.com
Sunstate Equipment	www.sunstateequiip.c-om
Titan Machinery	www.titanmachinery.com
TNT Crane & Rigging	www.tntcrane.com
United Rentals	www.ur.com
Wagner Rents	www.wagnerequipment.com
Worldwide Machinery	www.worldwidemachinery.com
Yancey Brothers	www.yanceybros.com